Rev	AWO #	Description	Date	Appr
-		RELEASED	10/29/10	

APPROVED: _____

DATE: _____ TITLE: _____

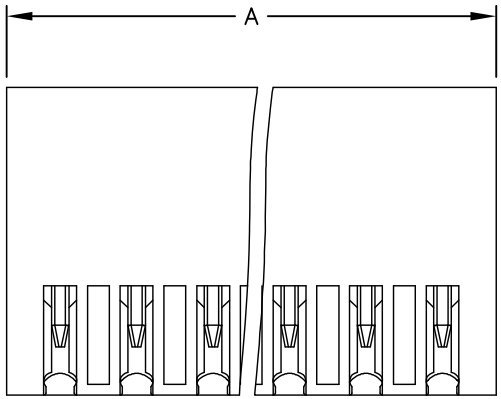

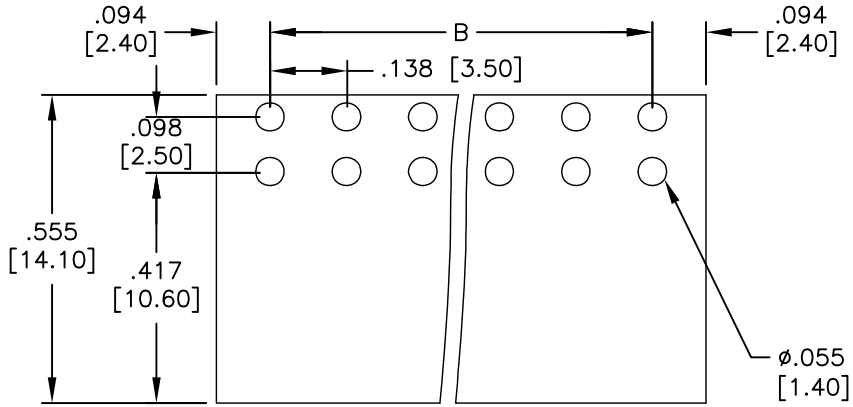

RECOMMENDED PCB LAYOUT

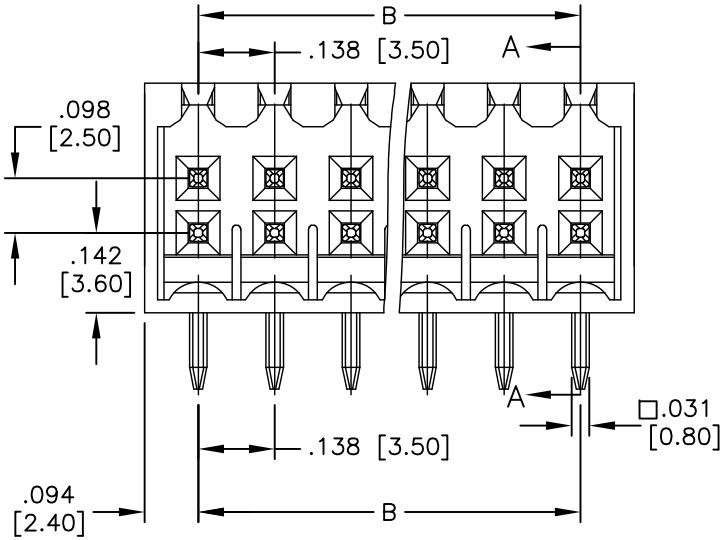

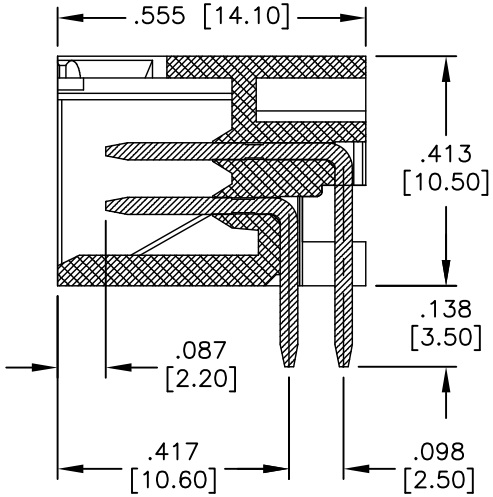

SECTION A-A

Poles: 4, 6, 8 thru 48

A = .138 [3.50] X No. of Spaces + .193 [4.90]

B = .138 [3.50] X No. of Spaces

SPECIFICATIONS:

Material:

Insulator: Thermoplastic, rated UL 94V-0

Insulator color: Orange

Contact: Copper Alloy, Tin plated.

Electrical:

Operation voltage: 150 VAC

Current rating: 7 Amps

Mechanical:

Withstanding Voltage: 1.3KV

Environmental:

Operating temperature: -40°C to +115°C

Lead free, RoHS compliant.

Recommended soldering temp: 235°C for 5 sec.

RoHS COMPLIANT

UNLESS OTHERWISE SPECIFIED
ALL DIMENSIONS ARE MM [INCHES]
TOLERANCES: EXCEPT AS NOTED

INCHES		HOLES	
.X	± .10	Ø.X	±.10
.XX	± .020	Ø.XX	±.015
.XXX	± .015	Ø.XXX	±.010

APPROVALS		DATE
DRAWN	AY	10/29/10
CHECKED	AW	10/29/10
APPROVED		

ADAM TECH

909 Rahway Avenue, Union, NJ 07083

Phone: 908-687-5000 Fax: 908-687-5710

TITLE

EURO BLOCK, .138 [3.50] PITCH, CLOSE TYPE, RIGHT ANGLE

SIZE	PART NO.	REV.
X	EB120-XX-A	-

REF: S00007T | SCALE: NTS | SHEET 1 OF 1