Schematic: (DUAL PORT)

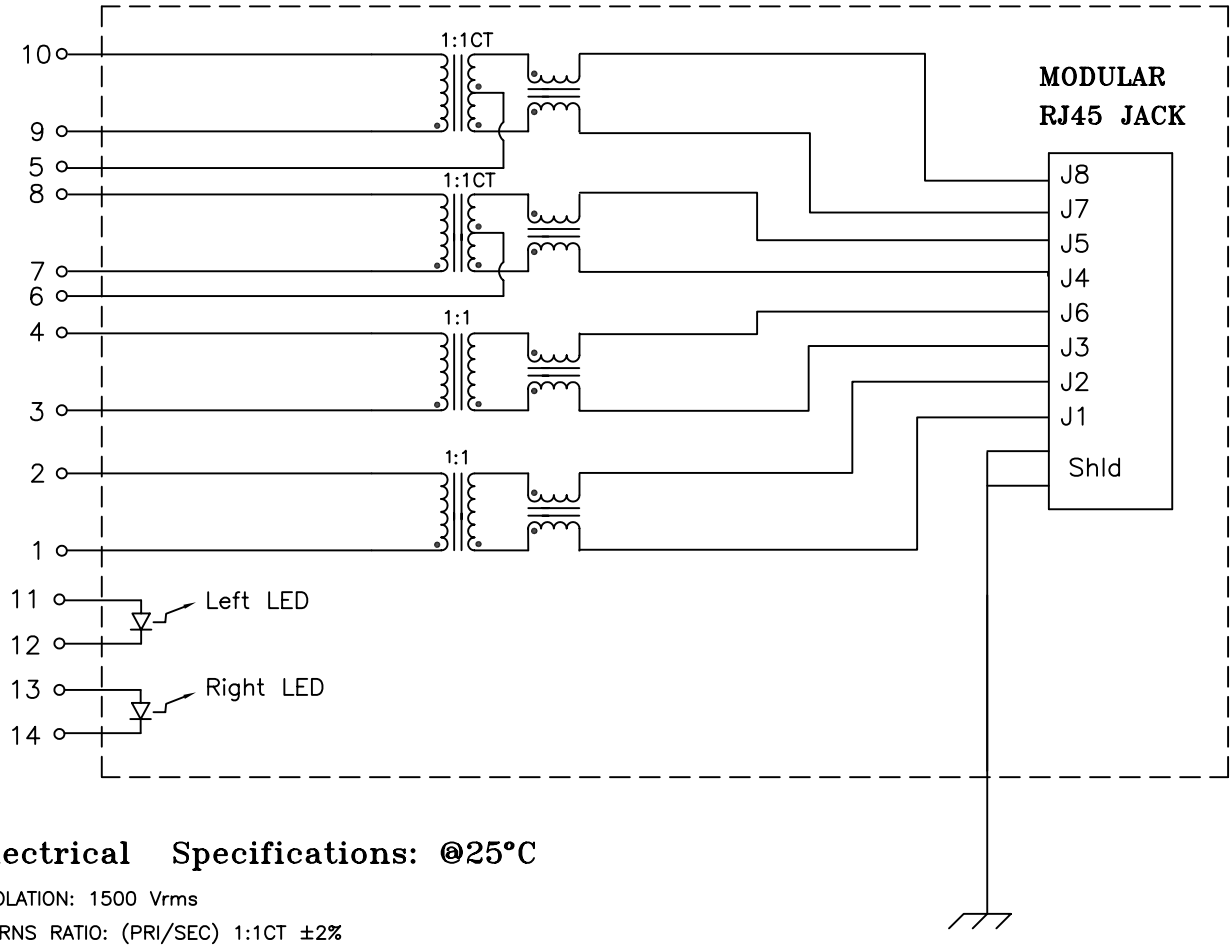

Electrical Specifications: @25°C

ISOLATION: 1500 Vrms

TURNS RATIO: (PRI/SEC) 1:1CT ±2%

OCL: 350uH MIN @100KHz 100mV 8mADC

DCR: P5–J7 and P5–J8 mismatch, 3% Max

DCR: P6–J4 and P6–J5 mismatch, 3% Max

Rise Time: 1.75ns Max.

INSERTION LOSS: –1.0dB MAX @1MHz–100MHz

RETURN LOSS:

–18dB Min @1–30MHz –15dB Min @30–40MHz

–13dB Min @40–50MHz –12dB Min @50–100MHz

Common Mode Rejection:

–43dB Min @1–30MHz –37dB Min @30–60MHz

–33dB Min @60–125MHz

Crosstalk: –45dB Min @0.3–30MHz

–43dB Min @30–60MHz –42dB Min @60–100MHz

Balanced DC Line Current: 800mA Max @57Vdc continuous Pins 5 + 6

1000mA Max @57Vdc for 200milliseconds Pins 5 + 6

Complete the Combo P/N as follows:

Replace 'x' & 'u' in the part number with one of the LED color letters:

Y–Yellow
G=Green
A=Amber
R=Red

'x' = Left LED Color
'u' = Right LED Color

C=Green(1)/Amber(2) Bicolor
D=Amber(1)/Green(2) Bicolor
M=Green(1)/Yellow(2) Bicolor
N=Yellow(1)/Green(2) Bicolor
P=Red(1)/Green(2) Bicolor
Q=Green(1)/Red(2) Bicolor
E=Red(1)/Yellow(2) Bicolor
F=Yellow(1)/Red(2) Bicolor
H=Amber(1)/Yellow(2) Bicolor
J=Green(1)/Green(2) Bicolor

Single Color LED:

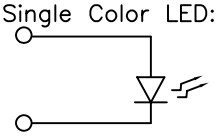

Bi–Color LED:

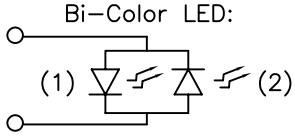

Notes:

1. Solderability: Leads shall meet MIL–STD–202G, Method 208H for solderability.
2. Flammability: UL94V–0
3. ASTM oxygen index: > 28%
4. Insulation System: Class F 155°C. UL file E151556
5. Operating Temperature Range: All listed parameters are to be within tolerance from –40°C to +85°C
6. Storage Temperature Range: –55°C to +125°C
7. Aqueous wash compatible
8. Electrical and mechanical specifications 100% tested
9. RoHS Compliant Component

DOC REV.: A/1

PROPRIETARY:

Document is the property of XFMRS Group & is not allowed to be duplicated without authorization.

XFMRS Inc. www.XFMRS.com	Title: DUAL PORT COMBO		
UNLESS OTHERWISE SPECIFIED TOLERANCES: .xxx ±0.010 Dimensions in Inch	P/N: XFGIB100APOL–CLxu2–4MS		REV. A
	DWN.	Juan Mao	Jul–19–10
	CHK.	YK Liao	Jul–19–10
SHEET 1 OF 2	APP.	BW	Jul–19–10

Mechanical Dimensions: (FOR CLxu2-4MS)

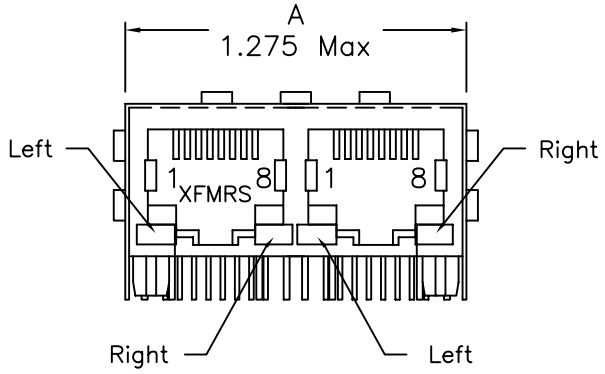

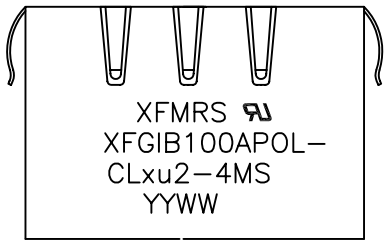

TOP VIEW

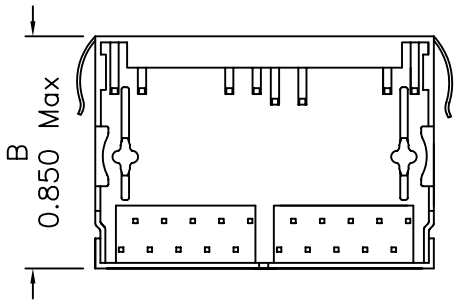

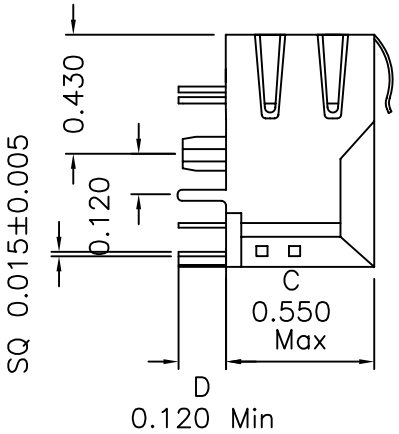

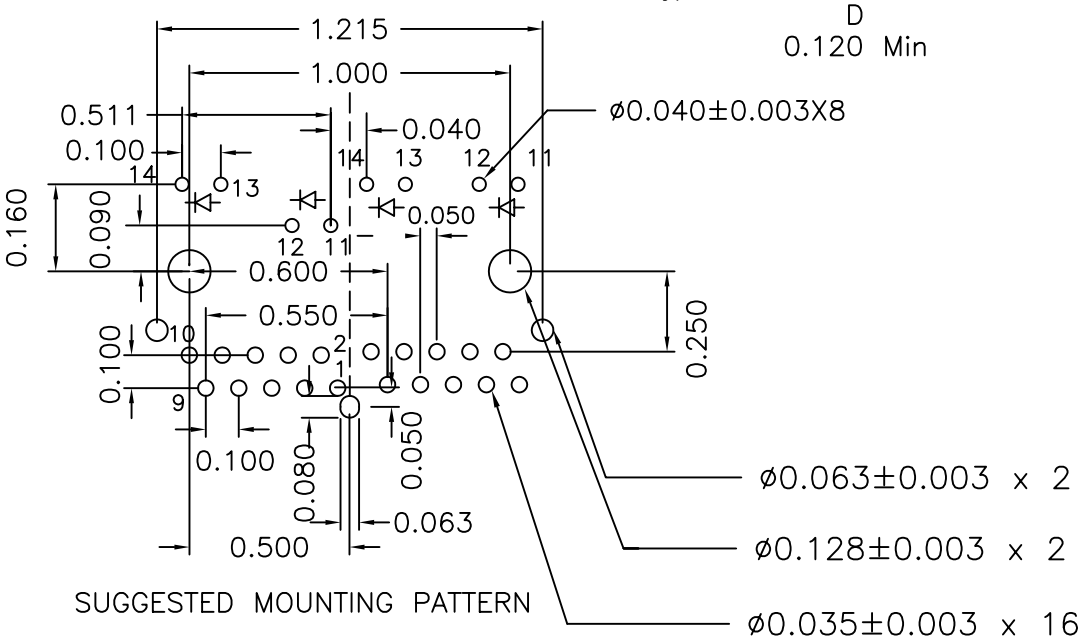

SUGGESTED MOUNTING PATTERN

XFMRS Inc www.XFMRS.com	Title:	Mechanical Dimensions For CLxu2-4MS Series	
UNLESS OTHERWISE SPECIFIED TOLERANCES: .xxx ±0.010 Dimensions in Inch	P/N: XFGIB100APOL-CLxu2-4MS		REV. A
	DWN.	Xianyi	Jul-19-10
	CHK.	YK Liao	Jul-19-10
SHEET 2 OF 2	APP.	BW	Jul-19-10

Doc. Rev A/1

PROPRIETARY:
Document is the property of XFMRS Group & is not allowed to be duplicated without authorization.