DATE	REVISIONS	REV
8-31-94	UPDATED SAFE OPER. SPECS.	A
4-5-95	UPDATED SPECS.	B
9-7-95	CORRECTED DIMS WHERE NOTED.	C
3-18-98	E.C.N. #10BRDR. & REDRAWN./	D

DRAWING NUMBER SSL-LX5099IGW/R REV D

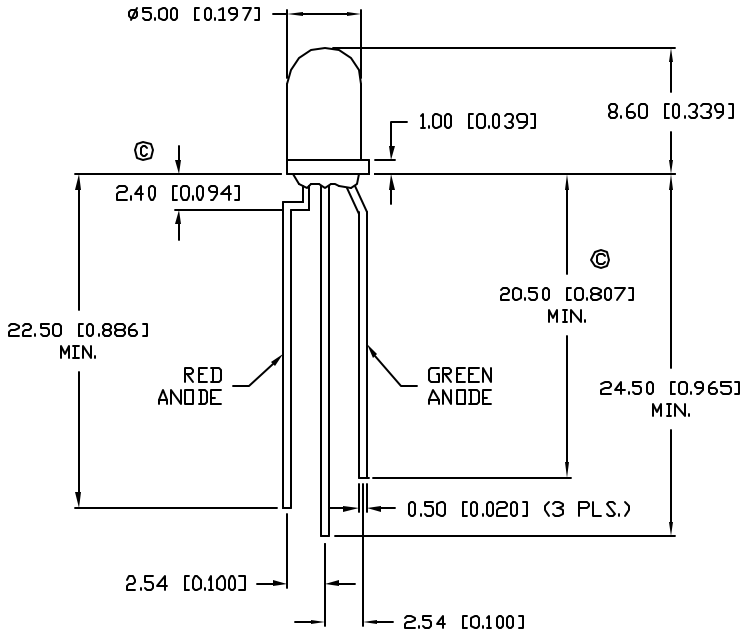

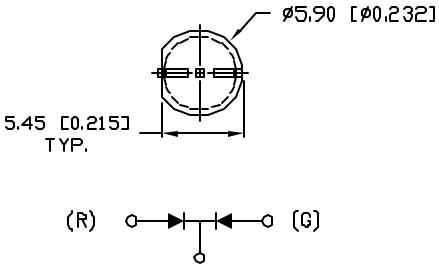

UNLESS OTHERWISE SPECIFIED TOLERANCE IS ±.25mm (±0.010")

ELECTRO-OPTICAL CHARACTERISTICS T_A =25°C I_f =20mA

PARAMETER	MIN	TYP	MAX	UNITS	TEST COND
PEAK WAVELENGTH		635 (RED)		nm	
		565 (GREEN)		nm	
FORWARD VOLTAGE(R/G)		2.0/2.2	2.5/2.6	V_f	
REVERSE VOLTAGE	5.0			V_r	I_r=100µA
Ⓑ AXIAL INTENSITY (R/G)		55/45		mcd	I_f =20mA
VIEWING ANGLE		60		2x theta	
EMITTED COLOR:	RED/GREEN				
EPOXY LENS FINISH:	MILKY WHITE				

Ⓑ LIMITS OF SAFE OPERATION AT 25°C

PARAMETER	COLORS	MAX	UNITS
PEAK FORWARD CURRENT*		150	mA
STEADY CURRENT	(R/G)	30/25	mA
POWER DISSIPATION		105	mW
DERATE FROM 25°C		-1.2	mW/°C
OPERATING, STORAGE TEMP.		-40 TO +85	°C
Ⓐ SOLDERING TEMP. 2.0mm FROM BODY		+260	°C 3 SEC. MAX

* t<10µS

RELIABILITY NOTE
OUR MANY YEARS OF EXPERIENCE DATA ACCUMULATION INDICATE THAT SOLDER HEAT IS A MAJOR CAUSE OF EARLY AND FUTURE FAILURE. PLEASE PAY ATTENTION TO YOUR SOLDERING PROCESS. Ⓓ

LUMEX INCORPORATED
290 E. HELLEN ROAD
PALATINE, ILLINOIS 60067
(847) 359-2790

CONFIDENTIAL INFORMATION
THE INFORMATION CONTAINED IN THIS DOCUMENT IS THE PROPERTY OF LUMEX INCORPORATED. EXCEPT AS SPECIFICALLY AUTHORIZED IN WRITING BY LUMEX INCORPORATED, THE HOLDER OF THIS DOCUMENT SHALL KEEP ALL INFORMATION CONTAINED HEREIN CONFIDENTIAL AND SHALL PROTECT SAME IN WHOLE OR IN PART FROM DISCLOSURE AND DISSEMINATION TO ALL THIRD PARTIES.

DATE: 7-9-92	DWN:	CHK'D:	APPD:
SCALE: N/A			

T-5mm (T-1 3/4) LED, RED/GREEN BICOLOR,
MILKY WHITE DIFFUSED LENS, COMMON CATHODE, REVERSE FLANGE.

DRAWING NUMBER SSL-LX5099IGW/R REV D