UNAUTHORIZED USE OF THIS DRAWING IS STRICTLY PROHIBITED

DAR	REV	DESCRIPTION	APPVD	DATE
1107	A	INITIAL RELEASE	TJD	5–06
1139	B	REVISE TO SHOW GROUND WRAPS	TJD	6–06
1282	C	CHANGE POWER FROM 200W TO 150W	TJD	4–07
1453	D	REVISED SPECIFICATIONS	TJD	5–08
2191	E	SEE DAR	DG	12–09
3744	F	SEE DAR	DG	6–12
4556	G	SEE DAR	DG	9–13

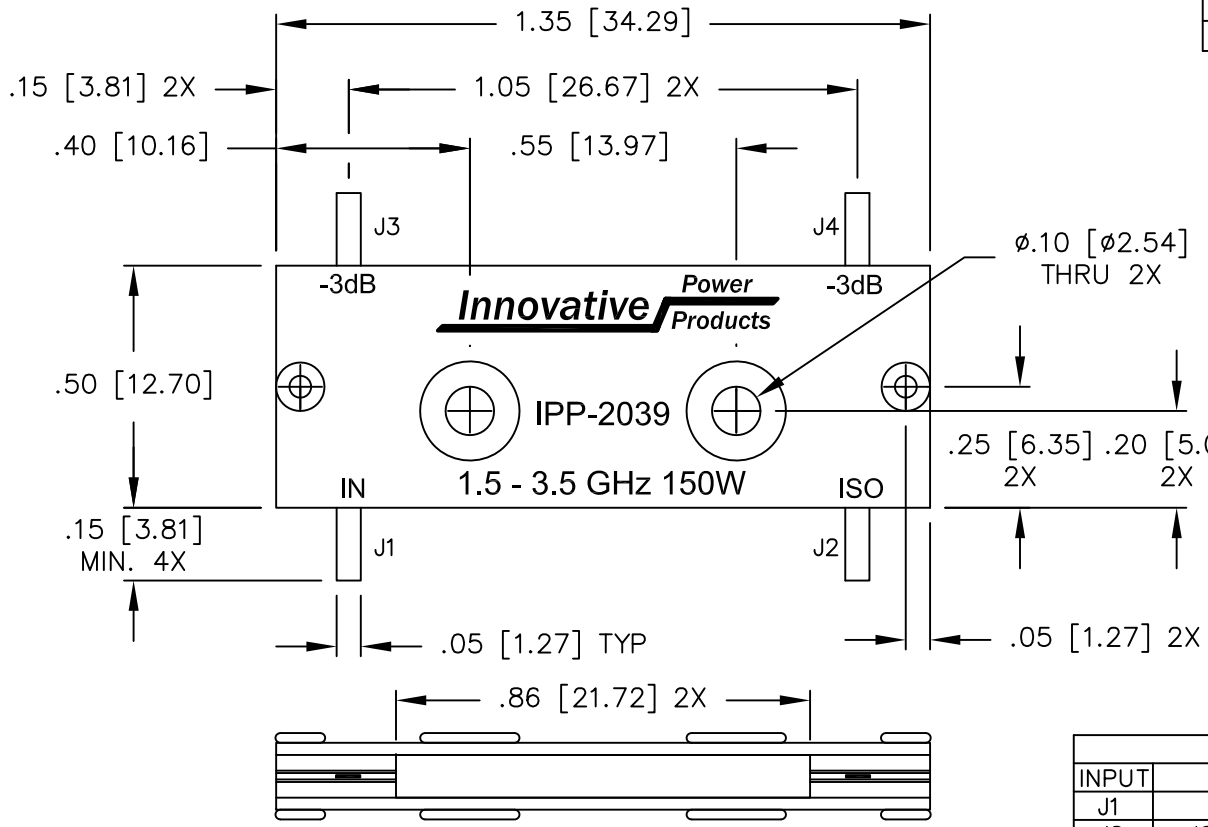

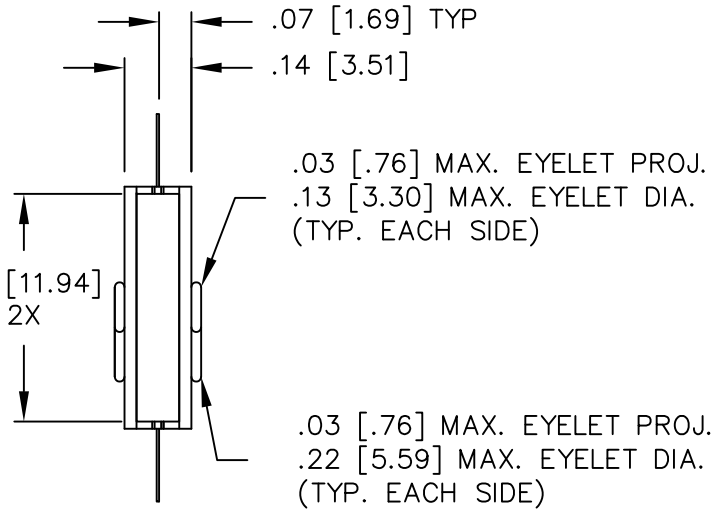

PORT CONFIGURATION				
INPUT	J1	J2	J3	J4
J1	---	ISOLATION	−3dB<0 DEG	−3dB<−90 DEG
J2	ISOLATION	---	−3dB<−90 DEG	−3dB<0 DEG
J3	−3dB<0 DEG	−3dB<−90 DEG	---	ISOLATION
J4	−3dB<−90 DEG	−3dB<0 DEG	ISOLATION	---

NOTES:
1. LEAD MATERIAL: 99.99% PURE SILVER .005 [.127] THICK.
2. SEE 90° APPLICATION NOTE FOR FURTHER INFORMATION.
3. RoHS COMPLIANT.
4. DATA AND SPECIFICATIONS APPLY WHEN PART IS MOUNTED IN IPP TEST FIXTURE TF–1000. TEST FIXTURE CONFIGURATION/FOOTPRINT AVAILABLE ON REQUEST.

ELECTRICAL SPECIFICATIONS

FREQUENCY:	1.5 – 3.5 GHz.
INSERTION LOSS:	< 0.25 dB
VSWR:	< 1.25:1
ISOLATION:	> 18 dB
AMPLITUDE BALANCE:	±0.60 dB
PHASE BALANCE:	±5°
POWER:	150 WATT
TEMPERATURE:	−55°C TO 85°C

MATERIAL: AL. ALLOY, 6061-T6	DWN DG	DATE 5-06	Innovative Power Products
FINISH: CHEM FILM CLEAR PER MIL-DTL-5541, TYPE 2, REV F, CLASS 3 ROHS COMPLIANT	ENG TJD	DATE 5-06	TITLE: OUTLINE COUPLER, 90°, 1.5 - 3.5 GHz. 150W
	MANUF TP	DATE 5-06	
TOLERANCE IN [MM]: .XX ±.02 [.50] .XXX ±.005 [.127] ANG. ±1/2°	CAGE CODE: 437R2		
	SHEET 1 OF 1	SCALE 4:1	SIZE B / P/N IPP-2039 / REV. G