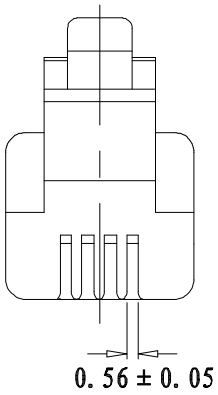

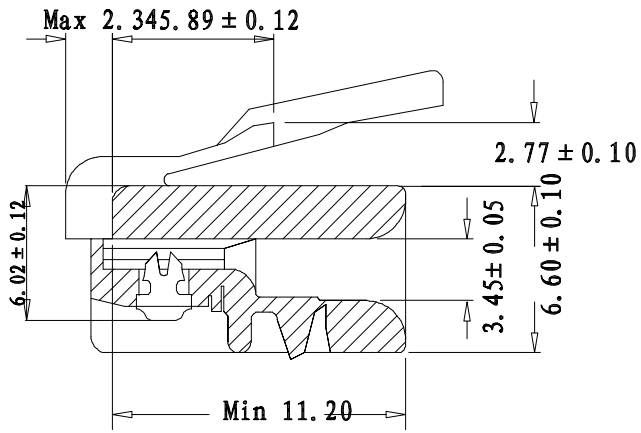

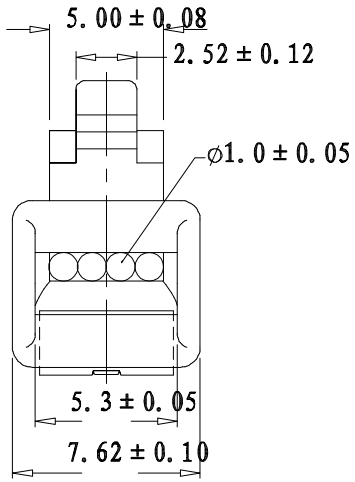

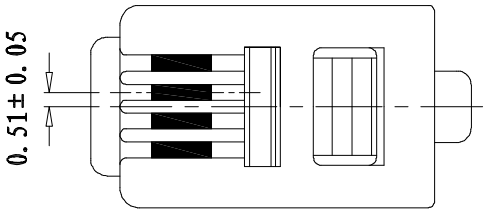

MP4P4C

SPECIFICATIONS

HOUSING	POLY CARBONATE(PC) UL94V2 NO. E919153
CONTACT BLADE	HIGH STRENGTH COPPER ALLLOY
MATERIAL	100 MICRON NICKEL UCNDERPLATED
PLATING TYPE	8% PHOSPHOR BRONZE
PLATING THICKNESS:	(50U")GOLD PLATED
OPERATING TEMP	-40°C TO 125°C
CURRENT RATING	250V AC MAX AT 2A
DIELECTRIC	500V AC
INSULATION RES	500MEGAOHMS
TERMINATION RES	35 MAX AFTER ENVIRONMENTAL TESTS
TENSILE STRENGTH	20 LBS(89N)MIN
DURABILITY	500 MATING CYCLES

COMPLIES WITH FCC68/F

RoHS compliant
Unit: mm

Scale	FREE						Date	Name
TOLERANCE						Drawn	26.05.2014	Ray
X.X	±x					Approved	26.05.2014	Ray
X.XX	±x							
X.XXX	±x							
DIM	TOL							
Angle	±x°	1	Drawn	26.05.2014	Ray			
Angle	TOL	Id.	Modification	Date	Name			

ASSMANN WSW components

Customer-No.

ASSMANN WSW-No. A-MO-4/4-F50

Drawing-No. ASS 6446 CO

rev00

Replace

Sheet