SSF2129H3

20V Dual P-Channel MOSFET

Main Product Characteristics

V_{DSS}	-20V
R_{DS}(on)	21mΩ (typ.)
I_D	-6.0A

SOP-8

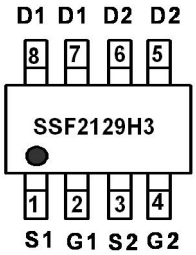

Marking and Pin Assignment

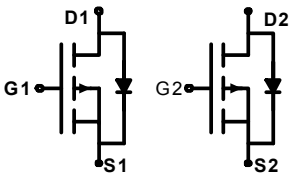

Schematic Diagram

Features and Benefits

- Advanced MOSFET process technology
- Special designed for PWM, load switching and general purpose applications
- Ultra low on-resistance with low gate charge
- Fast switching and reverse body recovery
- 150℃ operating temperature
- Lead free product

Description

It utilizes the latest processing techniques to achieve the high cell density and reduces the on-resistance with high repetitive avalanche rating. These features combine to make this design an extremely efficient and reliable device for use in power switching application and a wide variety of other applications.

Absolute Max Rating

Symbol	Parameter	Max.	Units
I_D @ TC = 25°C	Continuous Drain Current, V_{GS} @ 10V①	-6	A
I_{DM}	Pulsed Drain Current②	-24	
P_D @TC = 25°C	Power Dissipation③	2.0	W
	Linear Derating Factor	0.016	W/°C
V_{DS}	Drain-Source Voltage	-20	V
V_{GS}	Gate-to-Source Voltage	±8	V
T_J T_{STG}	Operating Junction and Storage Temperature Range	-55 to +150	°C

Thermal Resistance

Symbol	Characteristics	Typ.	Max.	Units
$R_{\theta JC}$	Junction-to-case③	—	40	℃/W
$R_{\theta JA}$	Junction-to-ambient (t ≤ 10s) ④	—	78	℃/W

Electrical Characteristics @T_A=25℃ unless otherwise specified

Symbol	Parameter	Min.	Typ.	Max.	Units	Conditions
$V_{(BR)DSS}$	Drain-to-Source breakdown voltage	-20	—	—	V	V_{GS} = 0V, ID = -250μA
$R_{DS(on)}$	Static Drain-to-Source on-resistance	—	21	30	mΩ	V_{GS}=-4.5V,I_D = -6A
		—	33	40	mΩ	V_{GS}=-2.5V,I_D = -5.3A
$V_{GS(th)}$	Gate threshold voltage	-0.4	—	-1.5	V	V_{DS} = V_{GS}, I_D = -250μA
I_{DSS}	Drain-to-Source leakage current	—	—	1	μA	V_{DS} = -20V,V_{GS} = 0V
		—	—	50		T_J = 125℃
I_{GSS}	Gate-to-Source forward leakage	—	—	100	nA	V_{GS} =8V
		—	—	-100		V_{GS} = -8V
Q_g	Total gate charge	—	24	—	nC	I_D = -6A,
Q_{gs}	Gate-to-Source charge	—	4.2	—		V_{DS}=-10V,
Q_{gd}	Gate-to-Drain("Miller") charge	—	5.6	—		V_{GS} =-5V
$t_{d(on)}$	Turn-on delay time	—	8.1	—	ns	V_{GS}=-4.5V, VDS=-10V,
t_r	Rise time	—	15.2	—		I_D = -1A,
$t_{d(off)}$	Turn-Off delay time	—	98	—		R_{GEN}=6Ω
t_f	Fall time	—	35	—		
C_{iss}	Input capacitance	—	2819	—	pF	V_{GS} = 0V
C_{oss}	Output capacitance	—	262	—		V_{DS} = -10V
C_{rss}	Reverse transfer capacitance	—	196	—		f = 1MHz

Source-Drain Ratings and Characteristics

Symbol	Parameter	Min.	Typ.	Max.	Units	Conditions
I_S	Continuous Source Current (Body Diode)	—	—	-6	A	MOSFET symbol showing the integral reverse p-n junction diode. 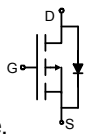
I_{SM}	Pulsed Source Current (Body Diode)	—	—	-24	A	
V_{SD}	Diode Forward Voltage	—	—	-1.0	V	I_S=-2.9A, V_{GS}=0V

Test Circuits and Waveforms

EAS test circuit:

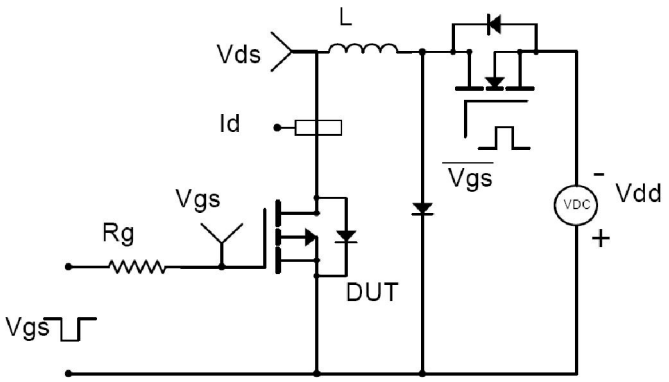

Gate charge test circuit:

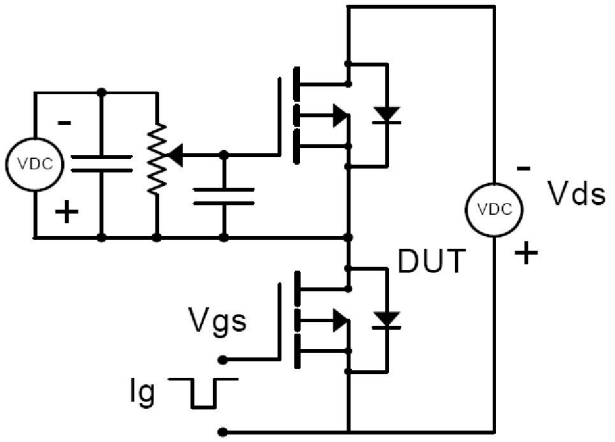

Switching time test circuit:

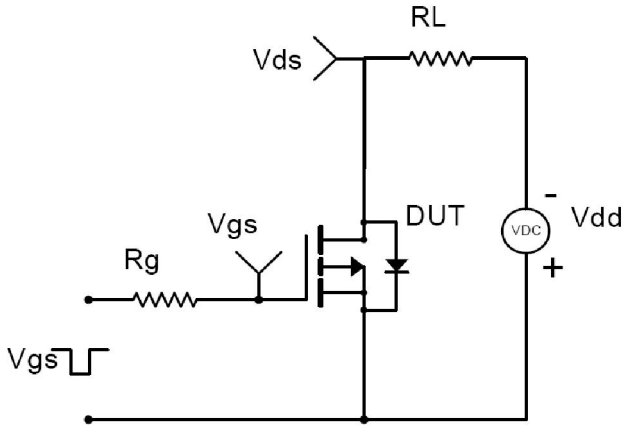

Switch Waveforms:

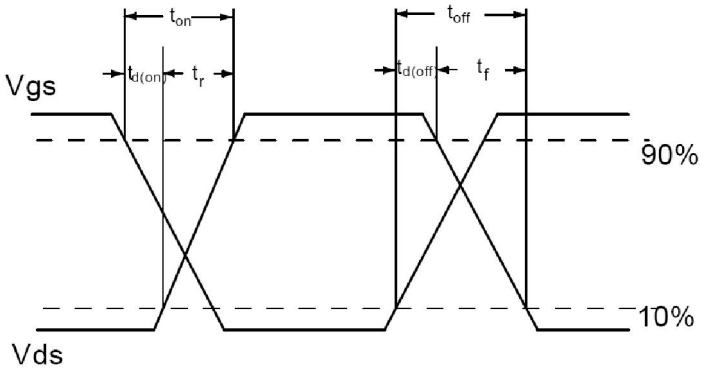

Notes:

①Calculated continuous current based on maximum allowable junction temperature.

②Repetitive rating; pulse width limited by max junction temperature.

③The value of $R_{\theta JA}$ is measured with the device mounted on 1 in 2 FR-4 board with 2oz. Copper, in a still air environment with TA =25°C

④These curves are based on the junction-to-case thermal impedence which is measured with the device mounted to a large heatsink, assuming a maximum junction temperature of $T_{J(MAX)}$=150°C.

Typical Electrical and Thermal Characteristics

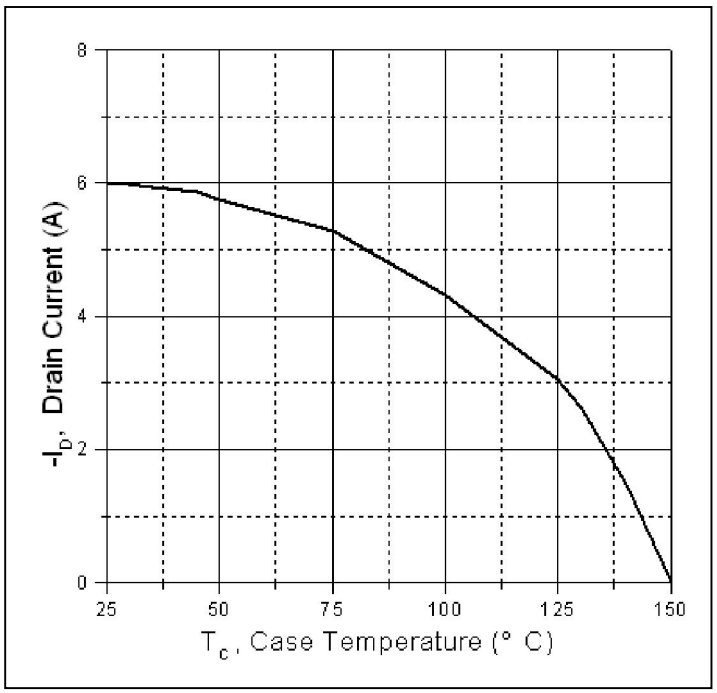

Figure 1. Maximum Drain Current Vs. Case Temperature

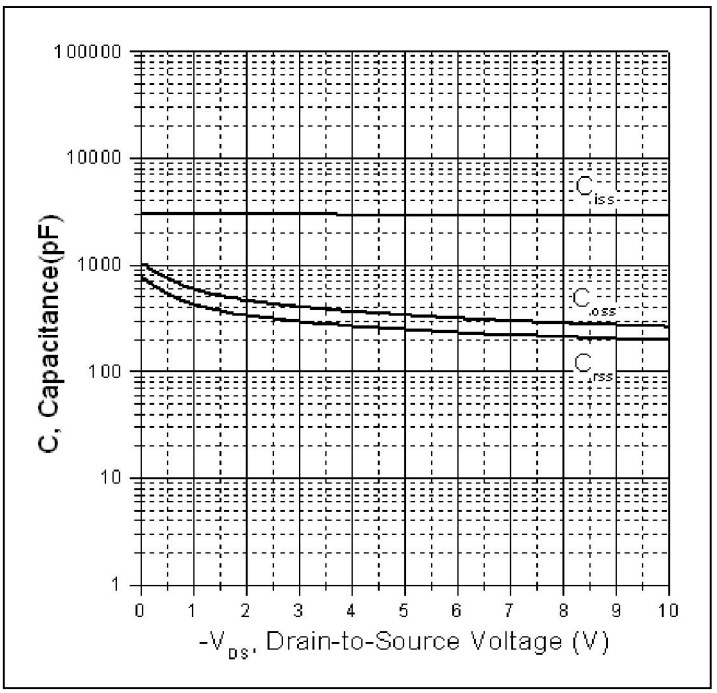

Figure 2.Typical Capacitance Vs. Drain-to-Source Voltage

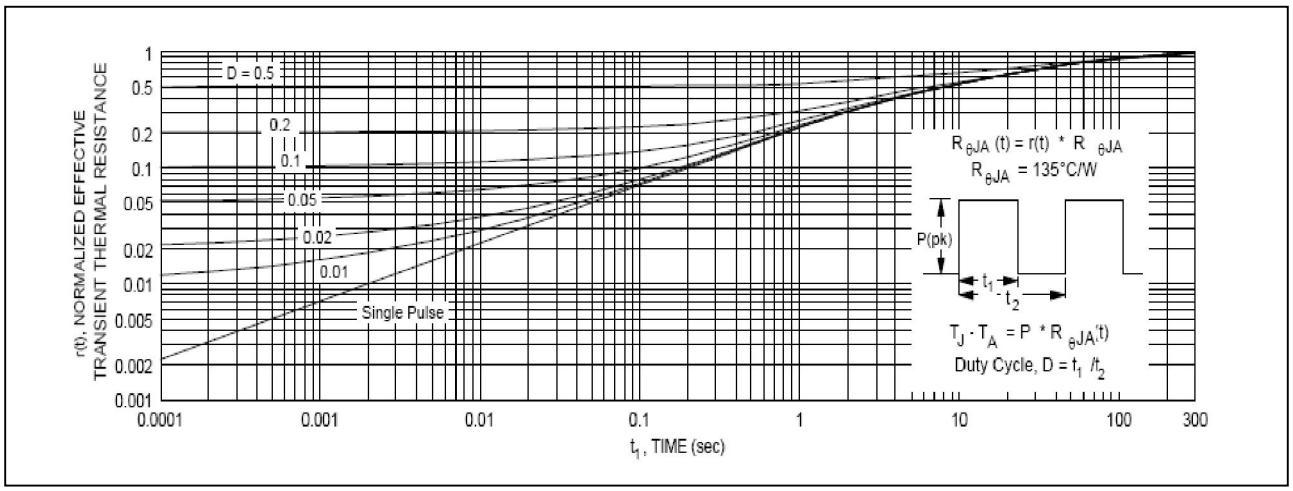

Figure3. Maximum Effective Transient Thermal Impedance, Junction-to-Case

Mechanical Data

SOP8 PACKAGE OUTLINE DIMENSION

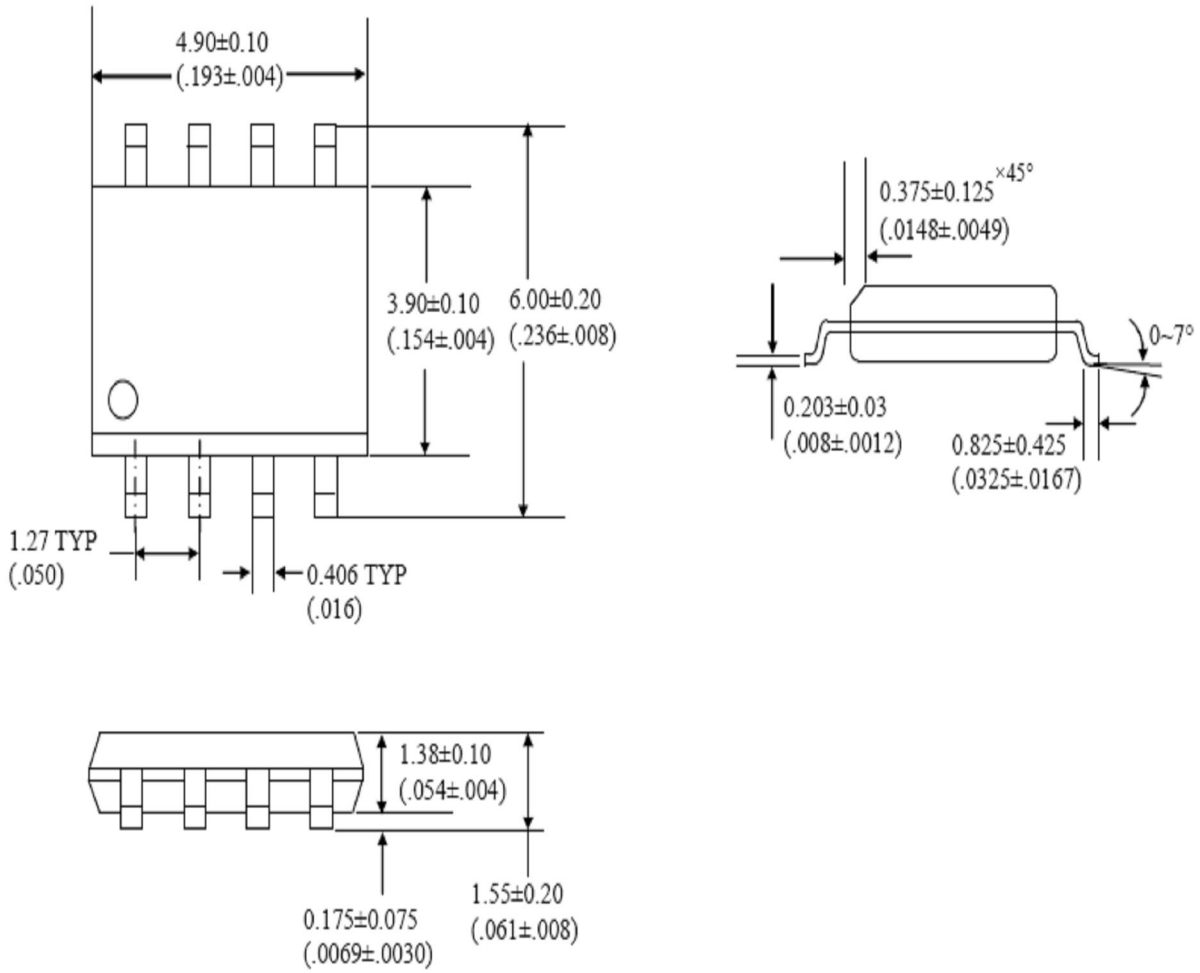

Ordering and Marking Information

Device Marking: SSF2129H3

Package (Available)

SOP-8

Operating Temperature Range

C : -55 to 150 ºC

Devices per Unit

Package Type	Units/ Tube	Tubes/Inner Box	Units/Inner Box	Inner Boxes/Carton Box	Units/Carton Box
SOP-8	2500	2	5000	8	40000

Reliability Test Program

Test Item	Conditions	Duration	Sample Size
High Temperature Reverse Bias(HTRB)	T_j=125℃ or 150℃ @ 80% of Max V_{DSS}/V_{CES}/VR	168 hours 500 hours 1000 hours	3 lots x 77 devices
High Temperature Gate Bias(HTGB)	T_j=125℃ or 150℃ @ 100% of Max V_{GSS}	168 hours 500 hours 1000 hours	3 lots x 77 devices