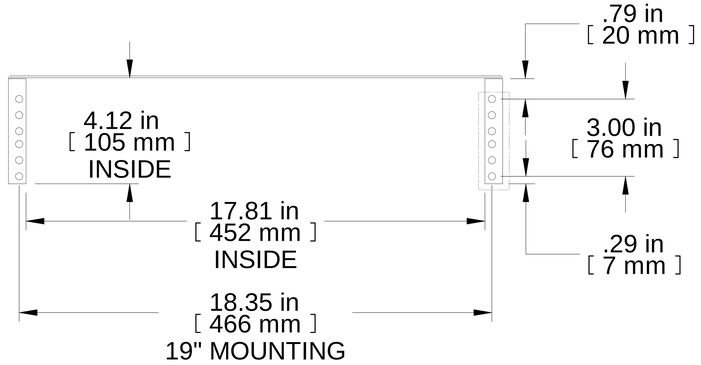

TOP VIEW

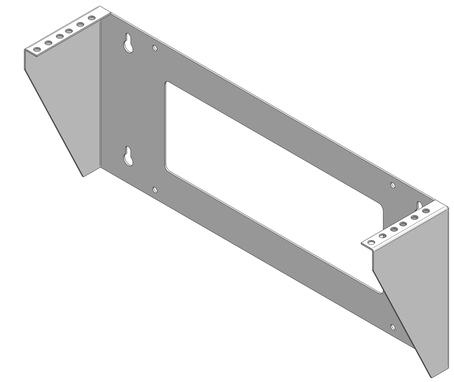

ISOMETRIC

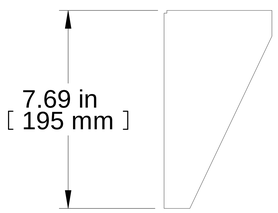

L.S. VIEW

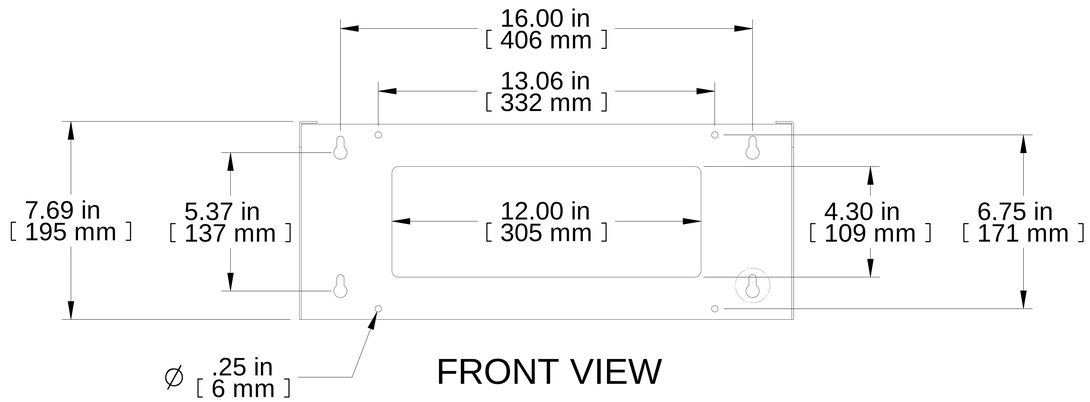

FRONT VIEW

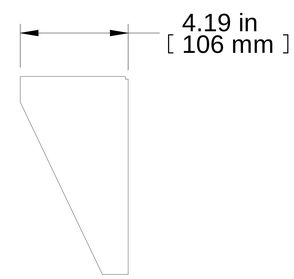

R.S. VIEW

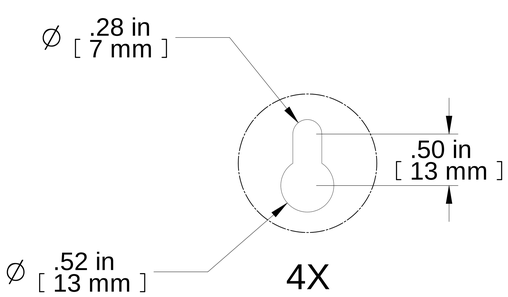

4X
4:1

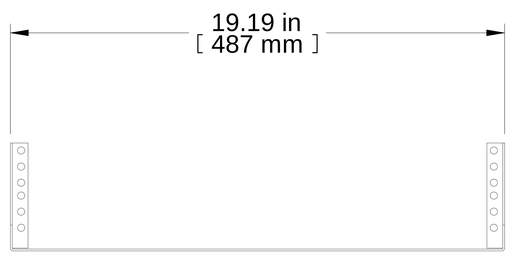

BOTTOM VIEW

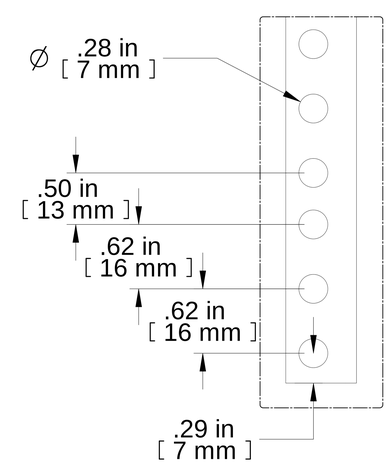

TYP
4:1

PART NUMBERS	
VPB192UBK	PAINTED SMOOTH BLACK

HARDWARE: #10-32 HARDWARE INCLUDED
WALL MOUNTING HARDWARE "**NOT INCLUDED**"
MADE FROM 14 GA. STEEL

Data subject to change without notice. Isometric drawing not to scale.
Les données sont sujettes à changement sans préavis.

HAMMOND MANUFACTURING®

www.hammondmfg.com

PART NO. VPB192U