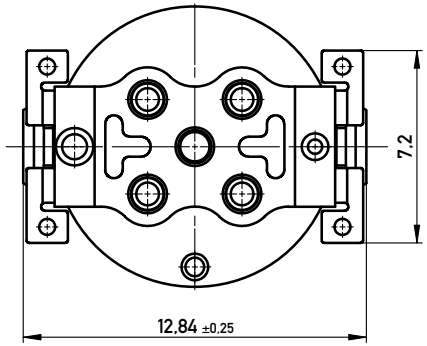

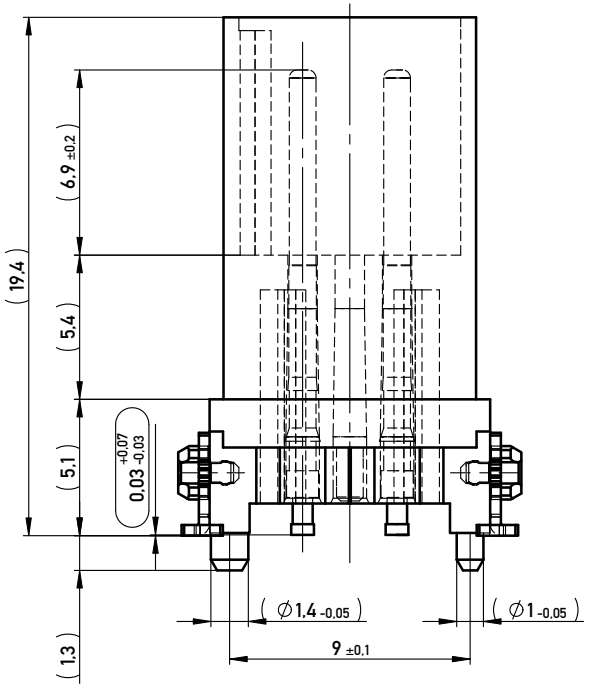

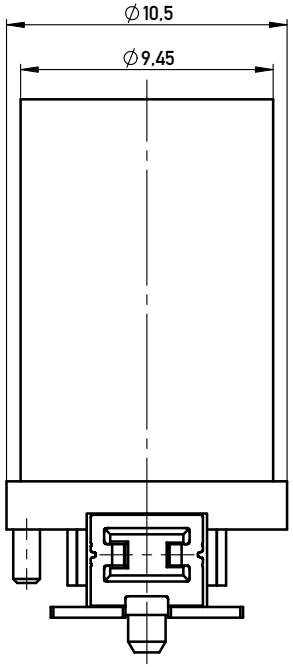

Layout - Vorschlag
PCB - Layout proposal

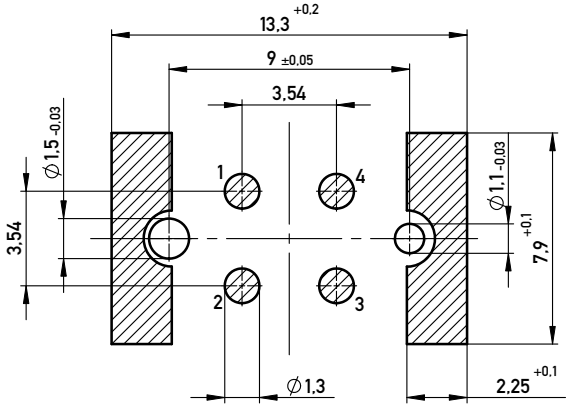

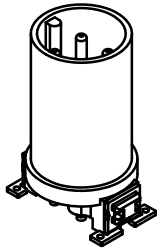

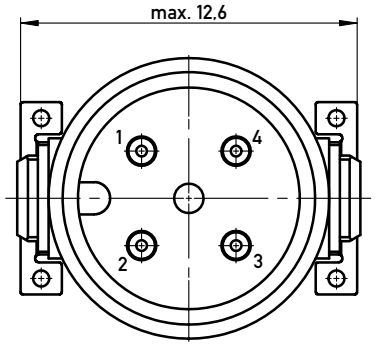

Koplanarität aller Kontakte und Clip <=0,1mm
coplanarity of all contacts and clips <=0,1mm

254859	4 Pol. A Cod.	Schüttgut / bulk
Ident-Nr.	Typ	Bemerkung

Information:	Tolerances	All Dimensions in mm	Scale 5:1
All rights reserved. Only for Information. To ensure that this is the latest version of this drawing, please contact one of the ERNI companies before using.	Subject to modification without prior notice. Drawing will not be updated.		Designation: Messerleiste M12 4 pol. *A Cod. 10,5mm*
		ERNI www.ERNI.com	254858 — I — A3
b — 18.01.2011			Class M12
Index — Date			

Copyright by ERNI GmbH
Proprietary notice pursuant to ISO 16016 to be observed.