Rev	AWO #	Description	Date	Appr
-		RELEASED	12/09/10	

APPROVED: _____

DATE: _____ TITLE: _____

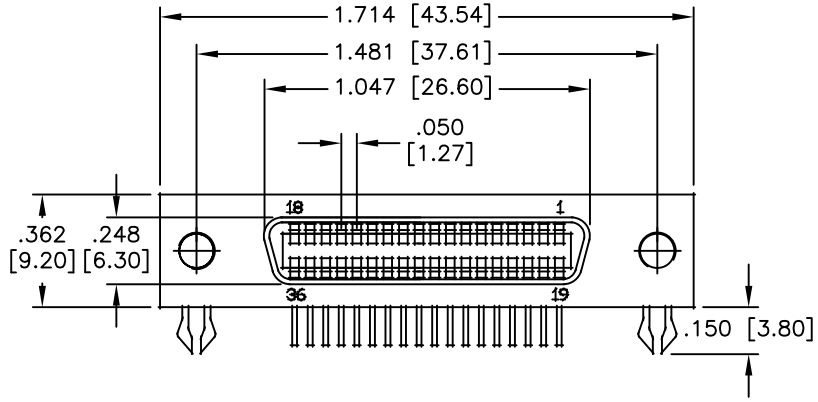

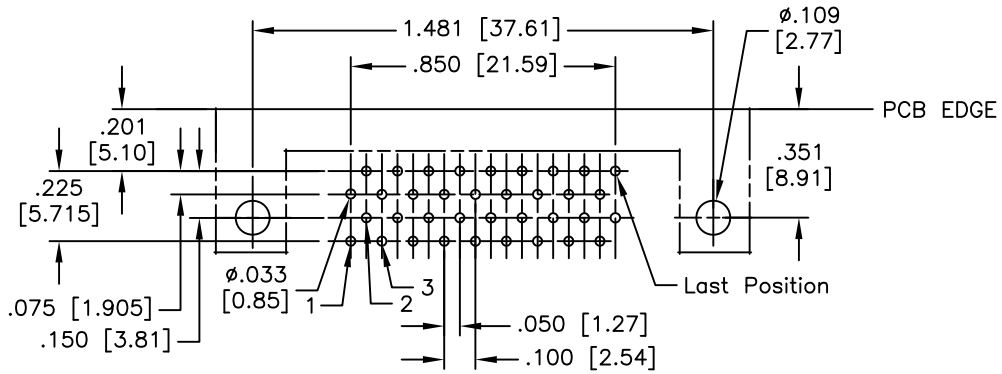

RECOMMENDED PCB LAYOUT

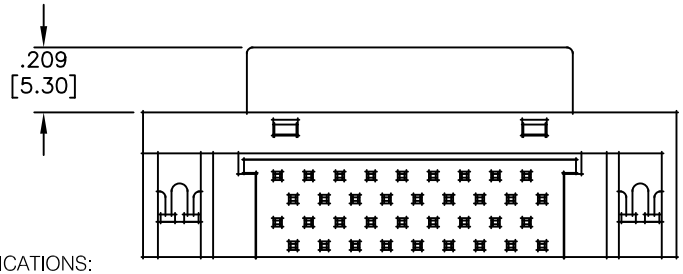

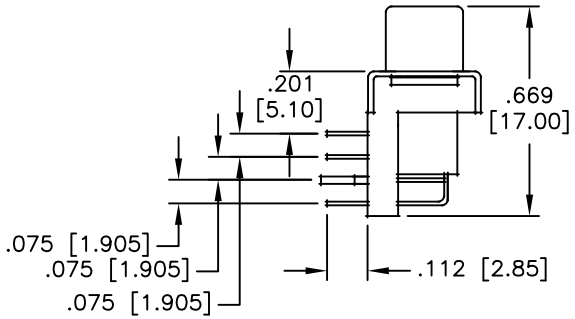

SPECIFICATIONS:

Material:

Insulator: PBT, glass reinforced, rated UL 94V–0
Insulator color: Black
Contacts: Phosphor Bronze
Front Shell: Steel, Nickel plated
Bracket: Steel, Nickel plated
Boardlock: Brass, Tin plated

Plating:

15u" Gold over Nickel underplate on mating area,
Tin over Copper underplate on tails

Electrical:

Current rating: 1 Amp max
Contact resistance: 35 mohms max
Insulation resistance: 500 Mohms min
Dielectric withstanding voltage: 500 VAC for 1 minute

Temperature Rating:

Operating temperature: –55°C to +105°C

Environmental:

Lead free, RoHS compliant
Recommended soldering temp: 235°C for 5 seconds

RoHS COMPLIANT

UNLESS OTHERWISE SPECIFIED
ALL DIMENSIONS ARE INCHES [MM]
TOLERANCES: EXCEPT AS NOTED

INCHES		HOLES	
.X	± .10	Ø.X	±.10
.XX	± .020	Ø.XX	±.015
.XXX	± .015	Ø.XXX	±.010

APPROVALS		DATE
DRAWN	DY	12/09/10
CHECKED		
APPROVED		

ADAM TECH
909 Rahway Avenue, Union, NJ 07083
Phone: 908-687-5000 Fax: 908-687-5710

TITLE: SCSI II/III SOCKET, R/A, NO LATCH BLOCKS BOARDLOCKS, M 2.6 MOUNTING HOLES

SIZE	PART NO.	REV.
X	S2A-SR-36-2-BL-3-A-15	-

REF: S00105T | SCALE: NTS | SHEET 1 OF 1