PART NAME	ALUMINUM RELAY RACK	PART No.	ARR-1272-NF & ARR-1272-BT ARR-1294 NF & ARR-1294-BT

MATERIAL:
BASE & TOP ANGLES ____ ALUMINUM EXTRUSIONS
UPRIGHTS _____ 0.190 THK. ALUMINUM

FINISH:
(SUFFIX -NF) NATURAL
(SUFFIX -BT) BLACK TEXTURE

UPRIGHTS ARE TAPPED #12-24 ON E.I.A. UNIVERSAL SPACING.

UNIT SHIPPED KNOCKED DOWN.

LOAD RATING: 1000 LBS. MAX.

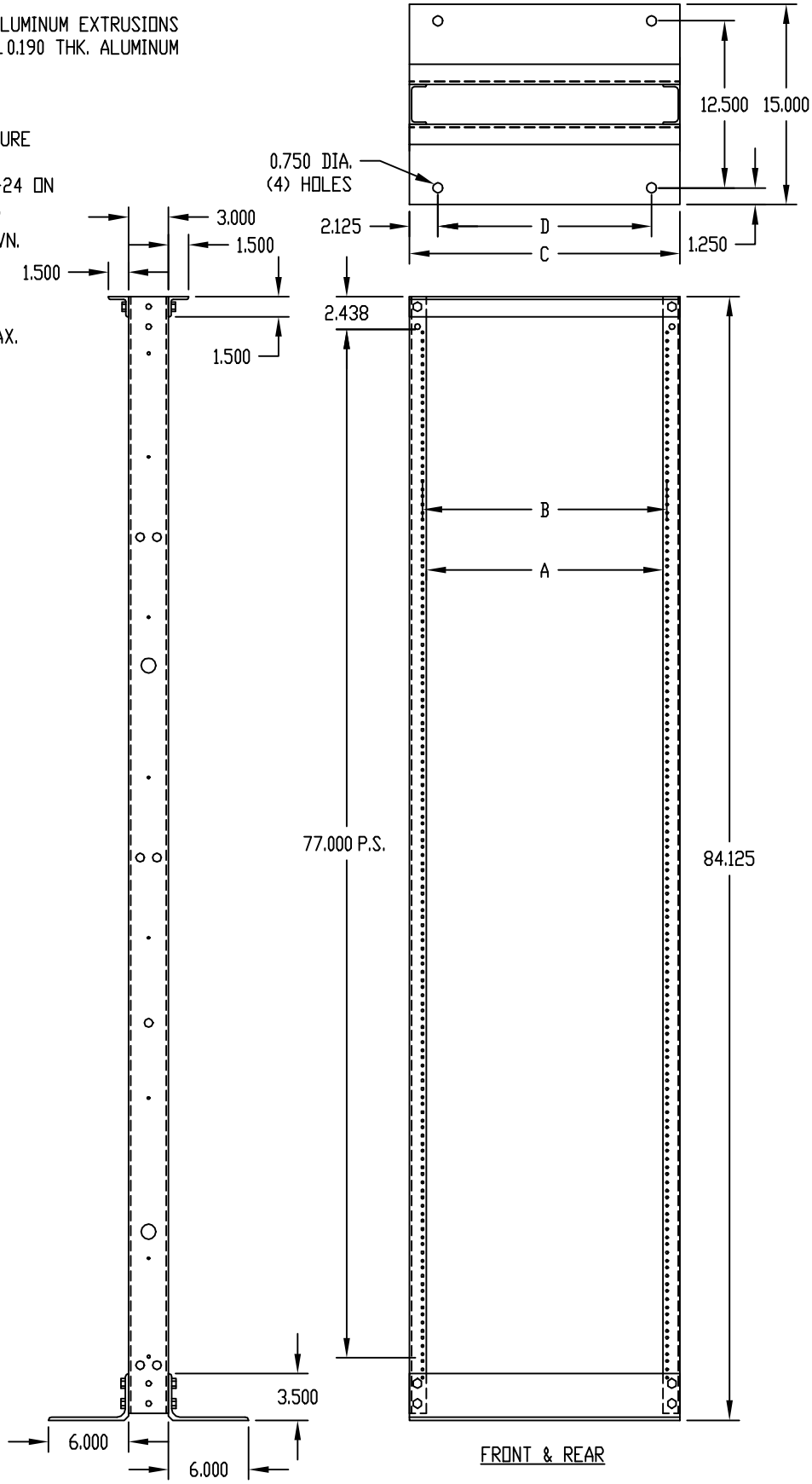

PART NO.	PANEL SPACE	OVERALL HEIGHT	A	B	C	D
ARR-1272-NF	77.000	84.125	17.752	18.312	20.250	16.000
ARR-1272-BT	77.000	84.125	17.752	18.312	20.250	16.000
ARR-1294-NF	77.000	84.125	21.752	22.312	24.250	20.000
ARR-1294-BT	77.000	84.125	21.752	22.312	24.250	20.000