Rev	AWO #	Description	Date	Appr
-		RELEASED	7/14/11	

APPROVED: _____

DATE: _____ TITLE: _____

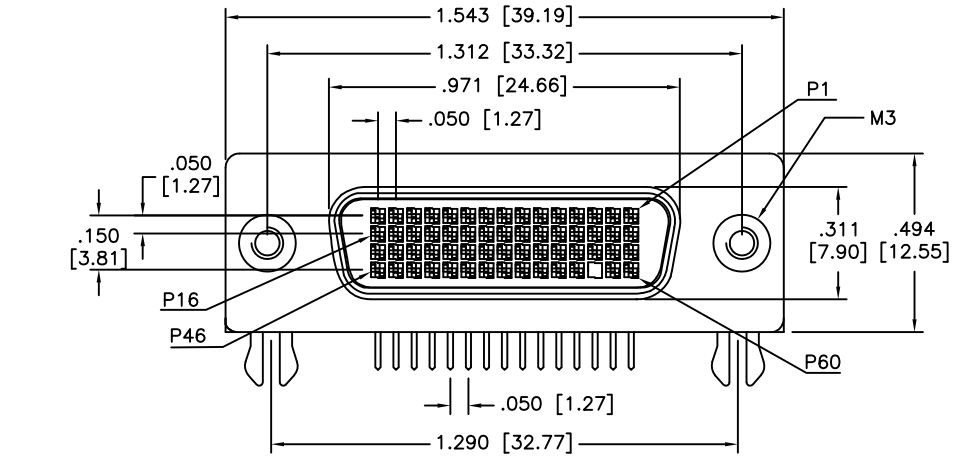

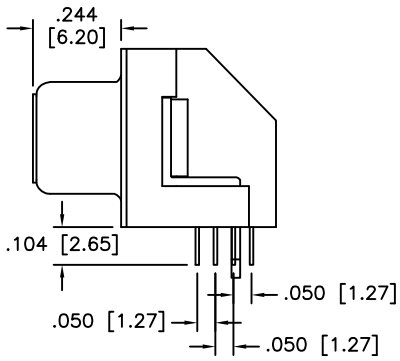

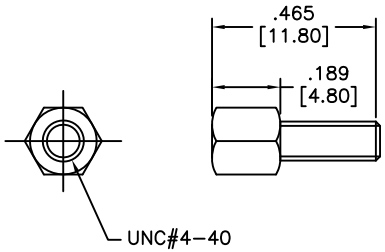

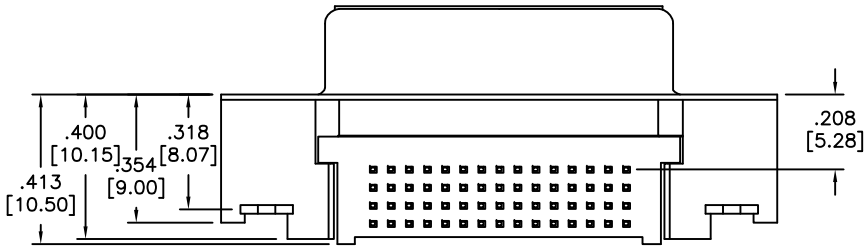

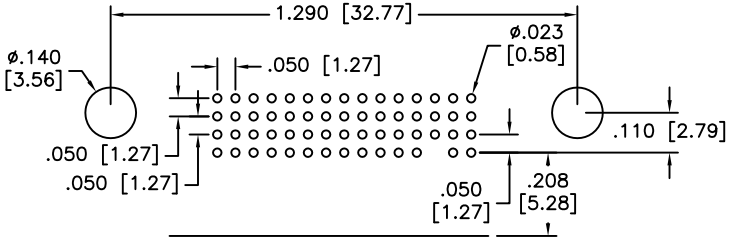

RECOMMENDED PCB LAYOUT

SPECIFICATIONS:
Material:
Housing: LCP, rated UL 94V-0, color Black
Shell: SPCC, Nickel plated
Terminal: Bronze
Clip post: Brass, Tin plated
Bottom Cap: PA9T, UL94V-0, color Ivory
Screw: Copper Alloy, Nickel plated
Plating:
Gold Flash over Nickel underplate overall
Electrical:
Current rating: 3 Amps max
Contact resistance: 20 mohms max
Insulation resistance: 500 Mohms min @ 500 VDC
Dielectric withstanding voltage: 500 VAC for 1 minute
Temperature Rating:
Operating temperature: -20°C to +80°C
Environmental:
Lead free, RoHS compliant.
Recommended soldering temp: 260° for 5 sec.

RoHS COMPLIANT

UNLESS OTHERWISE SPECIFIED
ALL DIMENSIONS ARE INCHES [MM]
TOLERANCES: EXCEPT AS NOTED

INCHES		HOLES	
.X	± .10	Ø.X	±.10
.XX	± .020	Ø.XX	±.015
.XXX	± .015	Ø.XXX	±.010

APPROVALS		DATE
DRAWN	DY	7/14/11
CHECKED		
APPROVED		

ADAM TECH
909 Rahway Avenue, Union, NJ 07083
Phone: 908-687-5000 Fax: 908-687-5710

TITLE: DMS CONNECTOR, DIP TYPE, 60P, R/A
SCREW NON-LOCK, REMOVED PIN 58

SIZE	PART NO.	REV.
X	LFH-60-SL-A-M3-X58	-

REF: S00127T | SCALE: NTS | SHEET 1 OF 1