Part Number: 0638932000
Status: Active
Description: Mini-Mac™ Applicator

Documents:
RoHS Certificate of Compliance (PDF)

General

Product Family	Application Tooling
Series	T9999
Comments	See Tooling Specification (PDF) Above
Function	Crimp
Geographic Area	Global
Level of Automation	Automatic, Semi-Automatic
More Detailed Tech Information	applicationtooling@molex.com
Product Name	Mini-Mac™
Survey	www.molex.com//review/apptool_survey.html
Tool Type	Mini-Mac Applicator
UPC	800756682297

Material Info

Reference - Drawing Numbers

Application Tooling Documents	ATS-638932000, TM-638000100, TM-638000100SP

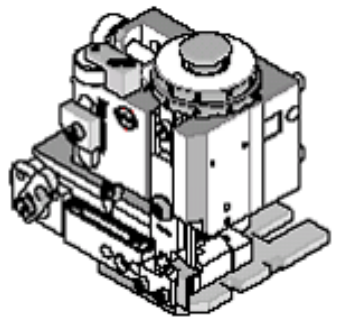

Series image - Reference only

EU ELV
Not Reviewed

EU RoHS
Not Reviewed

China RoHS

REACH SVHC
Not Reviewed

Halogen-Free Status
Not Reviewed

Need more information on product environmental compliance?

Email productcompliance@molex.com
Please visit the Contact Us section for any non-product compliance questions.

China ROHS	Not Reviewed
ELV	Not Reviewed

Search Parts in this Series
T9999 Series

Use With
Molex TM-3000™: 63801-7200 , 63801-7300 , Molex TM-4000™: 63801-7600 , Molex TM-2000™: 63800-8300 , 63800-8400 , and Most Industry Standard Presses or Wire Process Machines