Part Number: 98696-1002
Status: Active
Overview: MOX Products
Description: 2.54mm Pitch MOX Receptacle Crash Sensor, 2 Circuits, Unsealed, Black

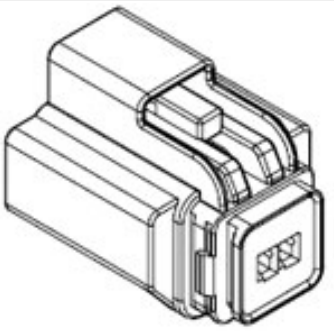

Series

image - Reference only

Documents:
Drawing (PDF)
Application Specification AS-98696-001 (PDF)
Packaging Specification PP-98696-001 (PDF)
RoHS Certificate of Compliance (PDF)

General

Product Family	Crimp Housings
Series	98696
Application	Power
Overview	MOX Products
Product Name	MOX
UPC	756054427507

Physical

Circuits (maximum)	2
Circuits Detail	2
Color - Resin	Black, Green
Gender	Female
Glow-Wire Compliant	No
Keying to Mating Part	None
Lock to Mating Part	Yes
Material - Resin	Polyester
Net Weight	3.200/g
Number of Rows	1
Packaging Type	Bag
Panel Mount	No
Pitch - Mating Interface	2.54mm
Pitch - Termination Interface	2.54mm
Polarized to Mating Part	Yes
Stackable	No
Temperature Range - Operating	-40°C to +105°C

Material Info

Reference - Drawing Numbers

Application Specification	AS-98696-001
Packaging Specification	PP-98696-001
Product Specification	RPS-98696-032
Sales Drawing	SD-98696-003

EU RoHS
ELV and RoHS Compliant
REACH SVHC
Not Reviewed
Low-Halogen Status
Low-Halogen

China RoHS

Need more information on product environmental compliance?

Email productcompliance@molex.com
For a multiple part number RoHS Certificate of Compliance, click here

Please visit the Contact Us section for any non-product compliance questions.

Search Parts in this Series
98696Series

Mates With
Please Contact Molex for Details

Use With
98658 MOX Crimp Terminal