Rev	AWO #	Description	Date	Appr
-		RELEASED	1/9/08	

APPROVED: _____

DATE: _____ TITLE: _____

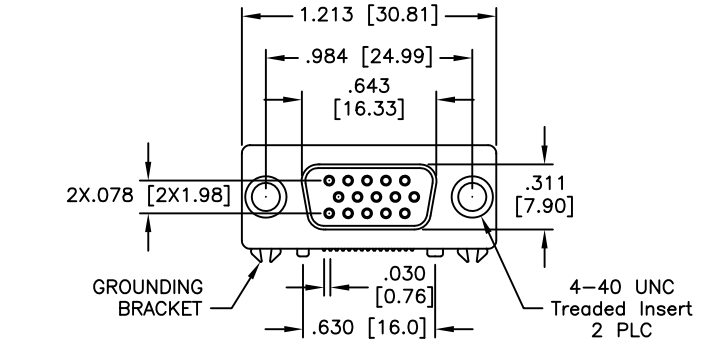

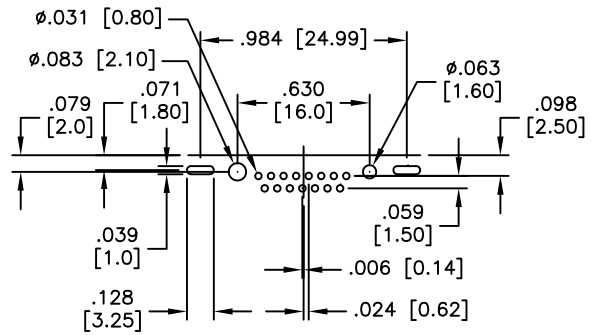

PIN NUMBER: 6 11 2 8 13 4 10 15
1 7 12 3 9 14 5
RECOMMENDED PCB LAYOUT

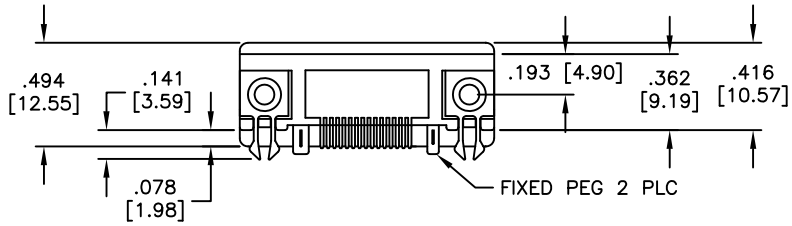

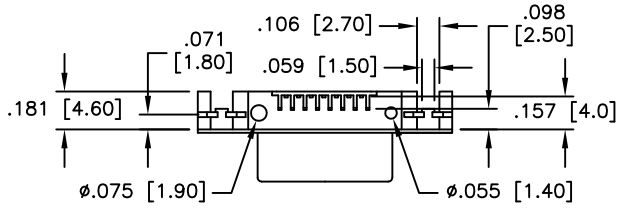

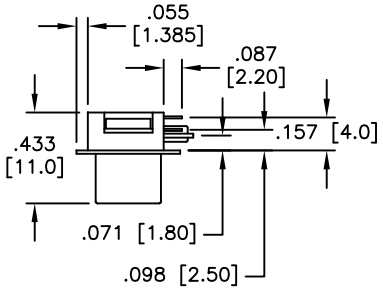

SPECIFICATIONS:

Material:

Insulator: PBT, glass reinforced, rated UL 94V–0
Insulator color: Black
Contacts: Phosphor Bronze
Shield: Steel, zinc plated or tin plated

Plating:

Gold over Nickel underplate on contact area,
Tin over Copper underplate on PCB tails.

Electrical:

Operating voltage: 300 VAC max
Current rating: 5 Amps max
Contact resistance: 13 mohms max
Insulation resistance: 1000 Mohms min @ 500 VDC
Withstanding voltage: 500 VAC for 1 minute

Temperature Rating:

Operating temperature: –55°C to +105°C

Environmental:

Lead free, RoHS compliant.
Recommended soldering temp: 235°C for 5 sec.

RoHS COMPLIANT

UNLESS OTHERWISE SPECIFIED
ALL DIMENSIONS ARE INCHES [MM]
TOLERANCES: EXCEPT AS NOTED

INCHES		HOLES	
.X	± .10	Ø.X	±.10
.XX	± .020	Ø.XX	±.015
.XXX	± .015	Ø.XXX	±.010

APPROVALS		DATE
DRAWN	SHIREN	1/9/08
CHECKED		
APPROVED		

ADAM TECH
909 Rahway Avenue, Union, NJ 07083
Phone: 908-687-5000 Fax: 908-687-5710

TITLE: D-SUBMINIATURE, RIGHT ANGLE TWO ROWS PCB LAYOUT, LOW PROFILE 15 POST FEMALE

SIZE	PART NO.	REV.
X	HDL15-SM-24-FP	-

REF: S00003T | SCALE: NTS | SHEET 1 OF 1