1.SCOPE

SAW filter series have broad line up products meeting all broadcast standard including NTSC,PAL and SECAM systems. These filters are composed of two interdigital transducers on a single-crystal. piezoelectrical chip. They are used in electronic equipments such as TV and so on.

2.Construction

2.1 Dimension and materials

Type : BF44A3M

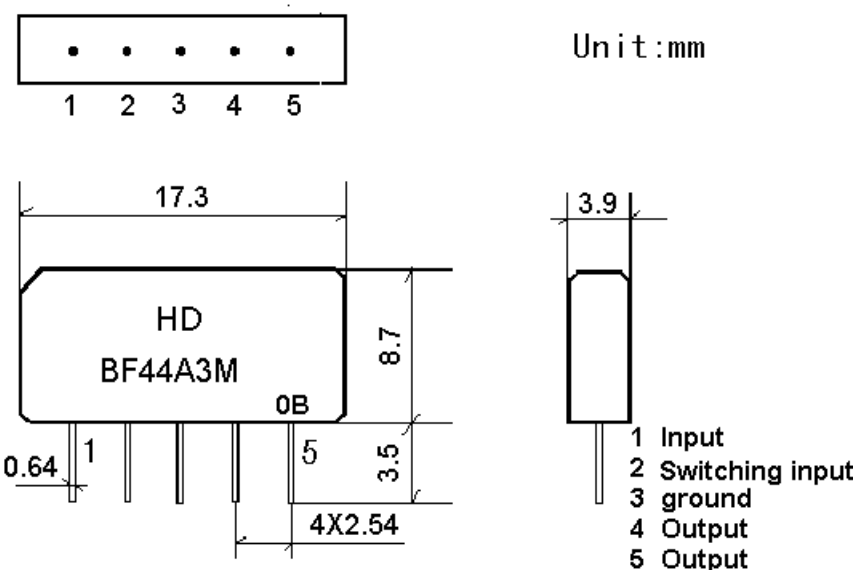

0: year(0,1,2,3,4,5,6,7,8,9)
B:product in this quarter(A:1~3,B:4~6,C:7~9,D:10~12)

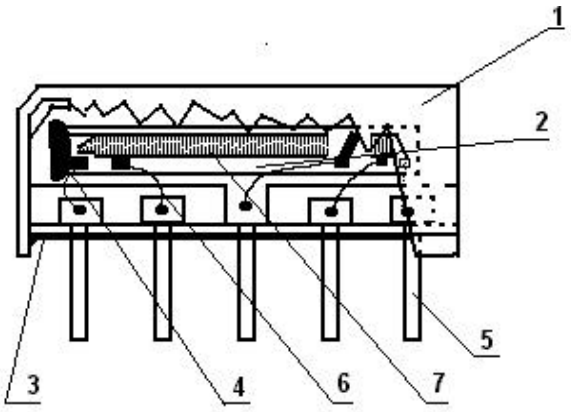

Components	Materials
1.Outer casing	PPS
2.Substrate	Lithium niobate
3.Base	Epoxy resin
4.Absorber	Epoxy resin
5.Lead	Cu alloy+Au plate
6.Bonding wire	AlSi alloy
7.Electrode	Al

2.2. Circuit construction, measurement circuit

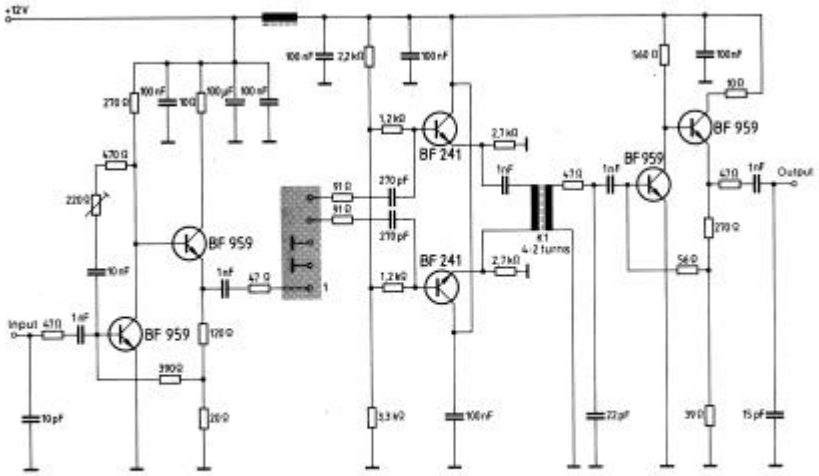

Test circuit for SIP-5 filter
Input impedance of the symmetrical post-amplifier: 2 kΩ in parallel with 3 pF

3.Characteristics

Standard atmospheric conditions

Unless otherwise specified , the standard rang of atmospheric conditions for making measurements and tests is as follows;

Ambient temperature : 15℃ to 35℃
Relative humidity : 25% to 85%
Air pressure : 86kPa to 106kPa

Operating temperature rang

Operating temperature rang is the rang of ambient temperatures in which the filter can be
operated continuously. -10℃ ~ +60℃

Storage temperature rang

Storage temperature rang is the rang of ambient temperatures at which the filter can be stored
without damage.
Conditions are as specified elsewhere in these specifications. -40℃ ~ +70℃

Reference temperature +25℃

3.1 Maximum Rating

DC voltage VDC	**12**	**V**	**Between any terminals**
AC voltage Vpp	**10**	**V**	**Between any terminals**

3.2 Electrical Characteristics

Characteristics of channel 1 (switching input pin 2 connected to ground pin 1)

Source impedance Zs=50Ω

Load impedance Z_L=2kΩ//3pF T_A=25℃

Item		Freq	min	typ	max	
Center frequency		Fo	-	44.00	-	MHz
Insertion attenuation Reference level		44.06MHz	12.5	14.5	16.5	dB
Pass bandwidth		B_{1dB}	-	1.6	-	MHz
		B_{3dB}	-	1.8	-	MHz
		B_{30dB}	-	2.7	-	MHz
Sidelobe	35.06~40.26MHz		35.0	42.0		dB
	40.26~42.56MHz		30.0	38.0		dB
	45.56~48.66MHz		22.0	30.0		dB
	48.66~55.06MHz		32.0	39.0		dB
Temperature coefficient			-72			ppm/k

Characteristics of channel 2 (switching input pin 2 connected to input pin 1)

Source impedance Zs=50Ω

Load impedance Z_L=2kΩ//3pF T_A=25℃

Item		Freq	min	typ	max	
Center frequency		Fo	-	44.00	-	MHz
Insertion attenuation Reference level		44.06MHz	13.0	15.0	17.0	dB
Pass bandwidth		B_{1dB}	-	0.8	-	MHz
		B_{3dB}	-	1.2	-	MHz
		B_{30dB}	-	2.4	-	MHz
Sidelobe	35.06~42.66MHz		31.0	39.0		dB
	45.36~47.36MHz		21.0	29.0		dB
	47.36~55.06MHz		31.0	39.0		dB
Temperature coefficient			-72			ppm/k

3.3 Environmental Performance Characteristics

Item Test condition	Allowable change of absolute Level at center frequency(dB)
High temperature test 70℃ 1000H	< 1.0
Low temperature test -40℃ 1000H	< 1.0
Humidity test 40℃ 90-95% 1000H	< 1.0
Thermal shock -20℃==25℃==80℃ 20 cycle	< 1.0

30M 10M 30M	
Solder temperature test Sold temp.260℃ for 10 sec.	< 1.0
Soldering Immerse the pins melt solder at 260℃+5/-0℃ for 5 sec.	More then 95% of total area of the pins should be covered with solder

3.4 Mechanical Test

Item Test condition	Allowable change of absolute Level at center frequency(dB)
Vibration test 600-3300rpm amplitude 1.5mm 3 directions 2 H each	<1.0
Drop test On maple plate from 1 m high 3 times	<1.0
Lead pull test Pull with 1 kg force for 30 seconds	<1.0
Lead bend test 90° bending with 500g weigh 2 times	<1.0

3.5 Voltage Discharge Test

Item Test condition	Allowable change of absolute Level at center frequency(dB)
Surge test Between any two electrode 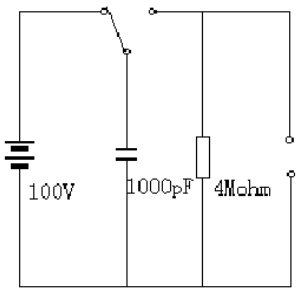	<1.0

3.6 Frequency response

Frequency response of channel 1 (switching input pin 2 connected to ground pin 1)

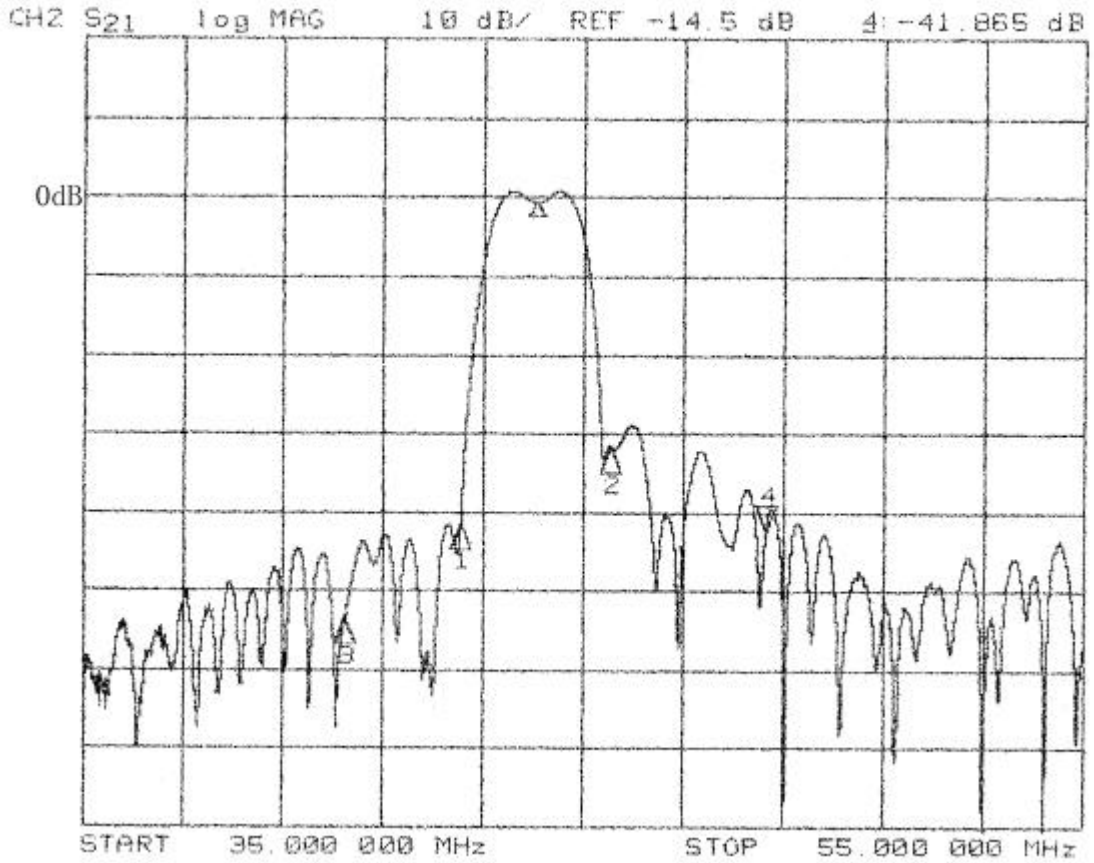

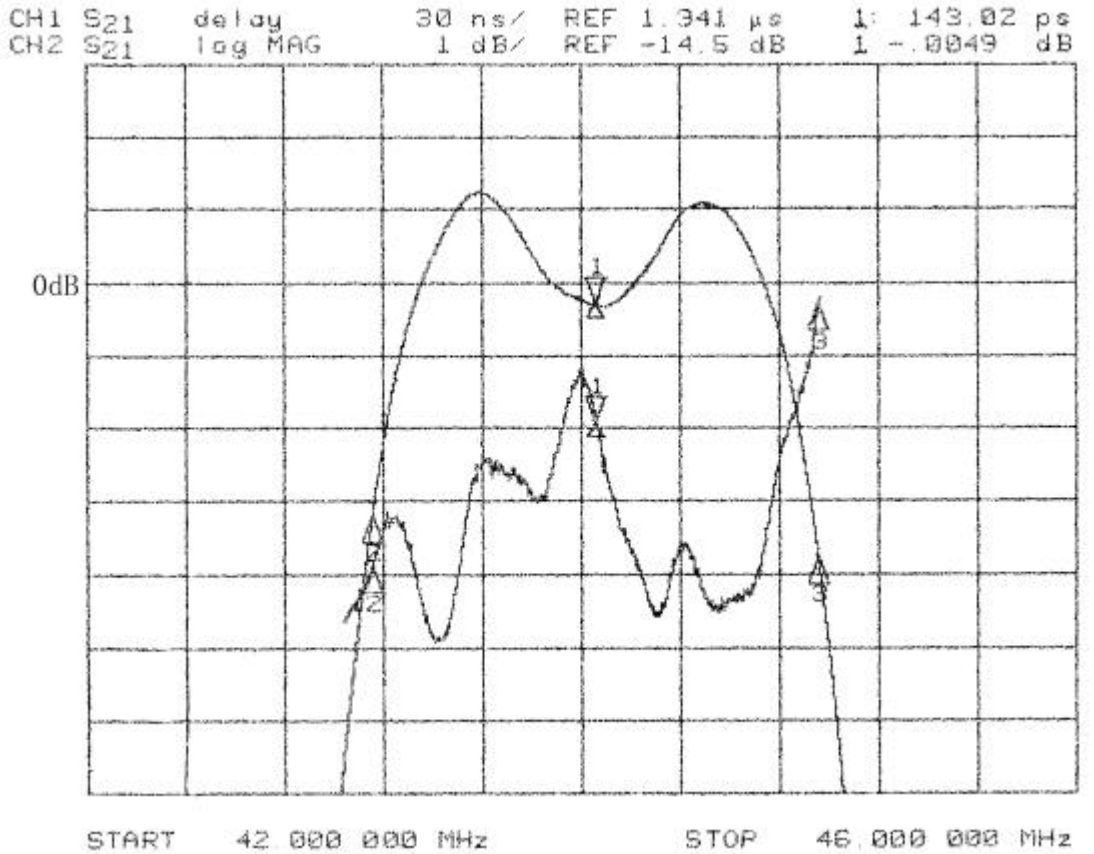

Frequency response of channel 2 (switching input pin 2 connected to input pin 1)