Rev	AWO #	Description	Date	Appr
-		RELEASED	12/17/10	

APPROVED: _____

DATE: _____ TITLE: _____

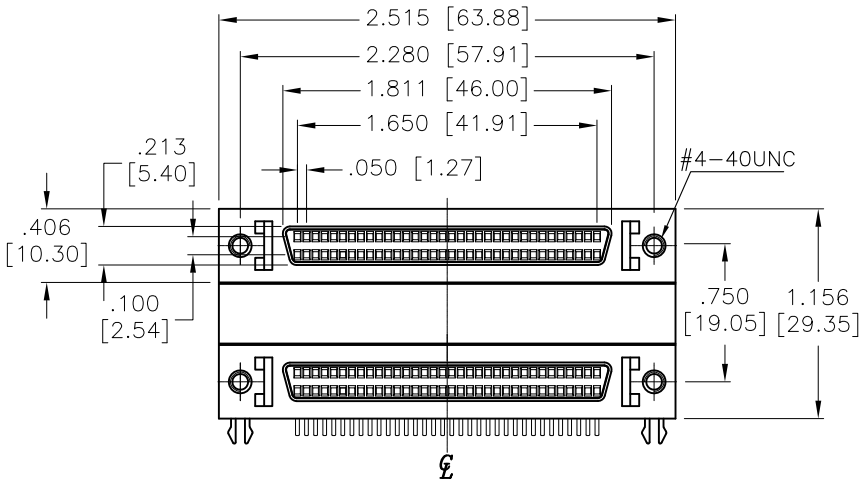

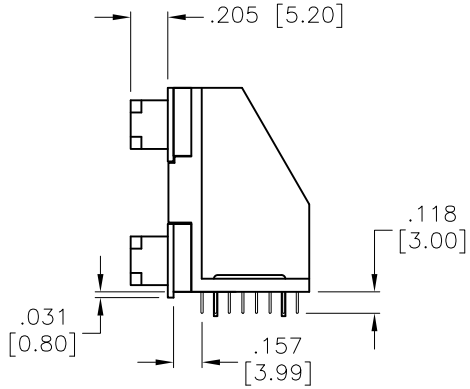

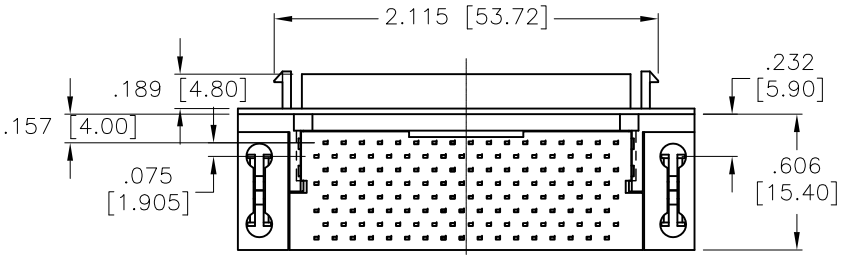

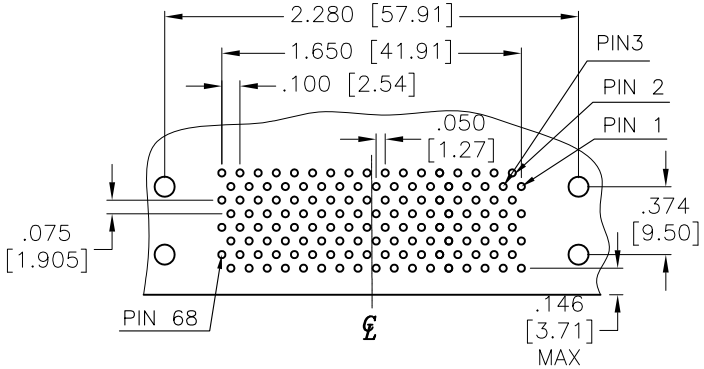

RECOMMENDED PCB LAYOUT

SPECIFICATIONS:

Material:
Insulator: PBT, glass filled, rated UL 94V-0
Contacts: Copper Alloy
Shell: Zinc Alloy
Boardlock: Copper Alloy
Bracket: Zinc Alloy

Plating:
Gold flash over Nickel underplate on contact area,
Tin over copper underplate on tails.

Electrical:
Current rating: 1 Amp max.
Contact resistance: 30 mohms max.
Insulation resistance: 1000 Mohms min.
Dielectric withstanding voltage: 500 VAC/minute

Temperature Rating:
Operating temperature: -55°C to +85°C

Environmental:
Lead free, RoHS Compliant
Recomended soldering temp: 235°C for 5 seconds

RoHS COMPLIANT

UNLESS OTHERWISE SPECIFIED
ALL DIMENSIONS ARE MM [INCHES]
TOLERANCES: EXCEPT AS NOTED

INCHES		HOLES	
.X	± .10	Ø.X	±.10
.XX	± .020	Ø.XX	±.015
.XXX	± .015	Ø.XXX	±.010

APPROVALS		DATE
DRAWN	AY	12/17/10
CHECKED	JL	12/17/10
APPROVED		

ADAM TECH
909 Rahway Avenue, Union, NJ 07083
Phone: 908-687-5000 Fax: 908-687-5710

TITLE: DUAL PORT SCSI, 68P FEMALE OVER 68P FEMALE,.050[1.27] PITCH , #4-40 UNC HOLES

SIZE	PART NO.	REV.
X	DPS-68-00-C-3	-

REF: S00027T | SCALE: NTS | SHEET 1 OF 1