| Rev | AWO # | Description | Date | Appr |
|---|---|---|---|---|
| - | | RELEASED | 7/14/11 | |

APPROVED: _____

DATE: _____ TITLE: _____

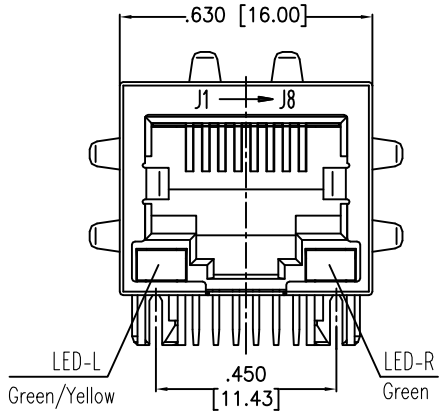


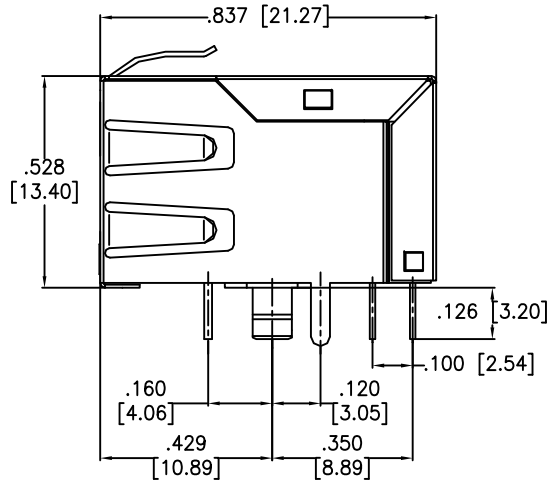


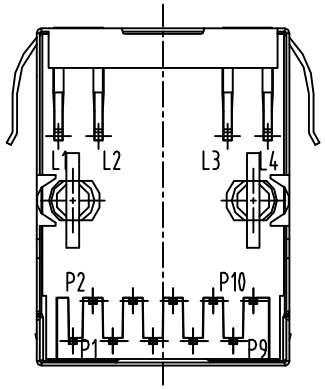


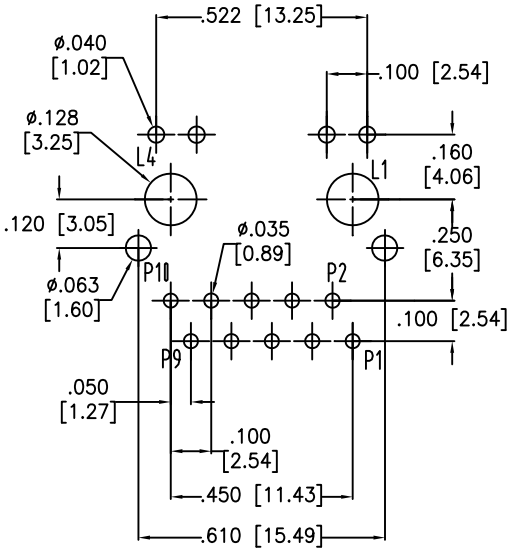


Recommended PCB Layout

SPECIFICATIONS:

Material:
Insulator: PBT, glass reinforced, rated UL 94V-0
Insulator color: Black
Contacts: Phosphor Bronze
Shield: Copper Alloy, Nickel plated

Contact Plating:
Gold Flash over Nickel underplate on contact area,
Tin over Copper underplate on tails
(See chart for thickness).

Electrical:
Operating voltage: 125 VAC max
Current rating: 1.5 Amps max
Contact Resistance: 30 mohms max. @ 500 VDC
Insulation resistance: 500 Mohms min @ 500 VDC
Dielectric strength: 1500 VAC RMS 60Hz, 1 min.

Temperature Rating:
Operating temperature: -40°C to +85°C

Environmental:
Lead free, RoHS compliant.
Recommended soldering temp: 235°C for 5 sec.

RoHS COMPLIANT

| X | PLATING |
|---|---|
| 0 | 15 µin Gold |
| 1 | 30 µin Gold |
| 2 | 50 µin Gold |

UNLESS OTHERWISE SPECIFIED
ALL DIMENSIONS ARE INCHES [MM]
TOLERANCES: EXCEPT AS NOTED

| INCHES | | HOLES | |
|---|---|---|---|
| .X | ± .10 | Ø.X | ±.10 |
| .XX | ± .020 | Ø.XX | ±.015 |
| .XXX | ± .015 | Ø.XXX | ±.010 |

| APPROVALS | | DATE |
|---|---|---|
| DRAWN | DY | 7/14/11 |
| CHECKED | | |
| APPROVED | | |


**ADAM TECH**
909 Rahway Avenue, Union, NJ 07083
Phone: 908-687-5000 Fax: 908-687-5710


TITLE: MODULAR JACK GANGED, 1 PORT, 8P8C W/LED1 GREEN / YELLOW, LED2 GREEN

| SIZE | PART NO. | REV. |
|---|---|---|
| X | MTJ-88TX1-FSD-PG-LU-M145 | - |

REF: S00167T | SCALE: NTS | SHEET 1 OF 2