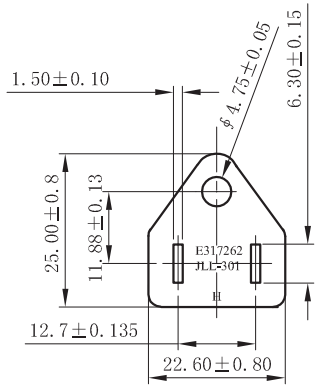

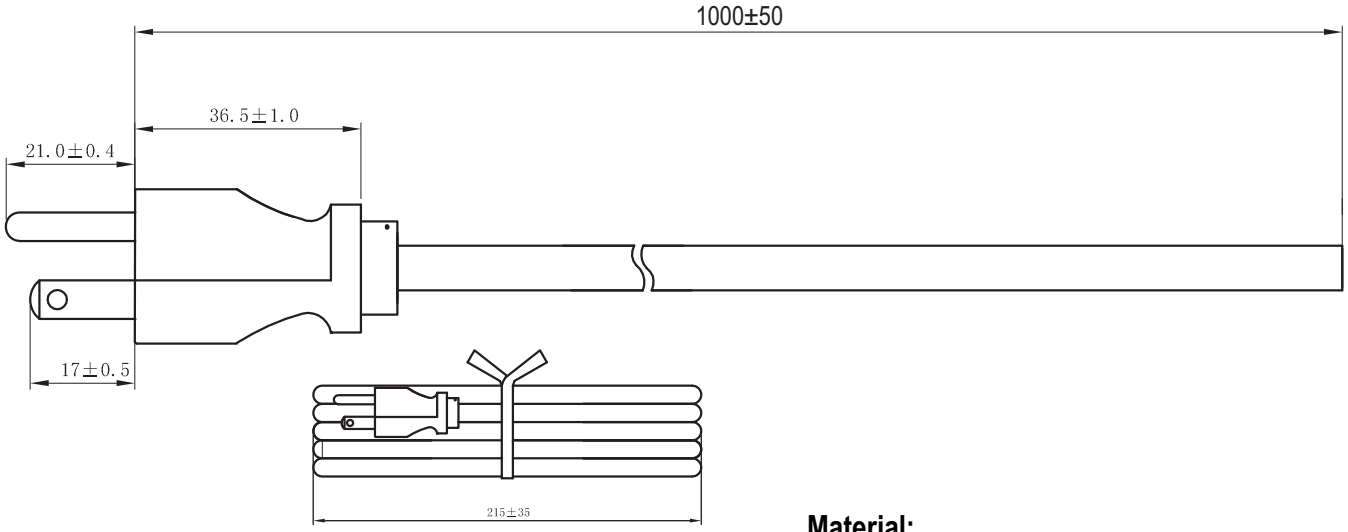

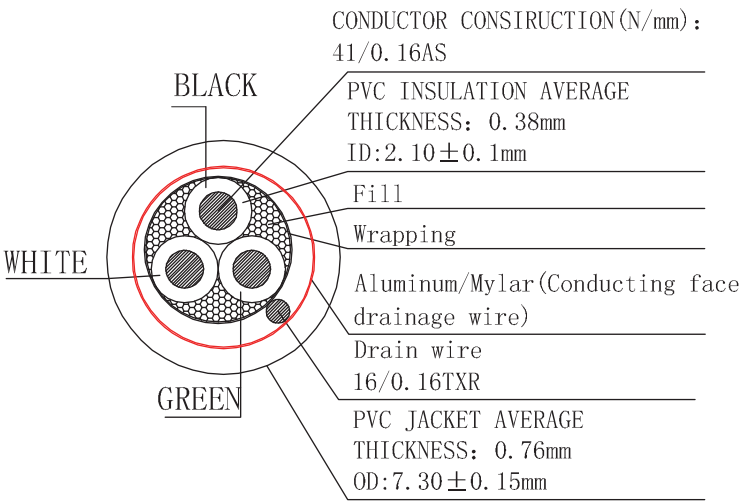

Material:

- E243711(UL) SVT 3 x 18AWG(0.824MM²)
  VW-1 Shielded, 60°C 300V
  - CSA 228191 SVT 3 x 18AWG(0.824MM²)
  FT2 Shielded 60°C 300V -LF-
- Jacket Color: Black
- E- Green; L - Black; N - White

Electrical:

- 100% Open & Short Testing
- Insulation Resistance: 100MΩ (Min.)
- Voltage: 500V DC / 1 Min.

Unit: MM

RoHS Complaint

Scale	1:1							Name
TOLERANCE						Drawn	12.27.11	Chappell
X.X	±0.40					Approved		
X.XX	±0.25							
X.XXX	±0.15							
Angle	±3°							
			Modification	Date	Name			

ASSMANN WSW components

Item No.
AK500-OE-5-0.5-R

Title: Power Cord - SVT/Open End, Shielded, 60°C, 18AWG, 0.5 Meter

Drawing No.

rev00

Replace

Sheet