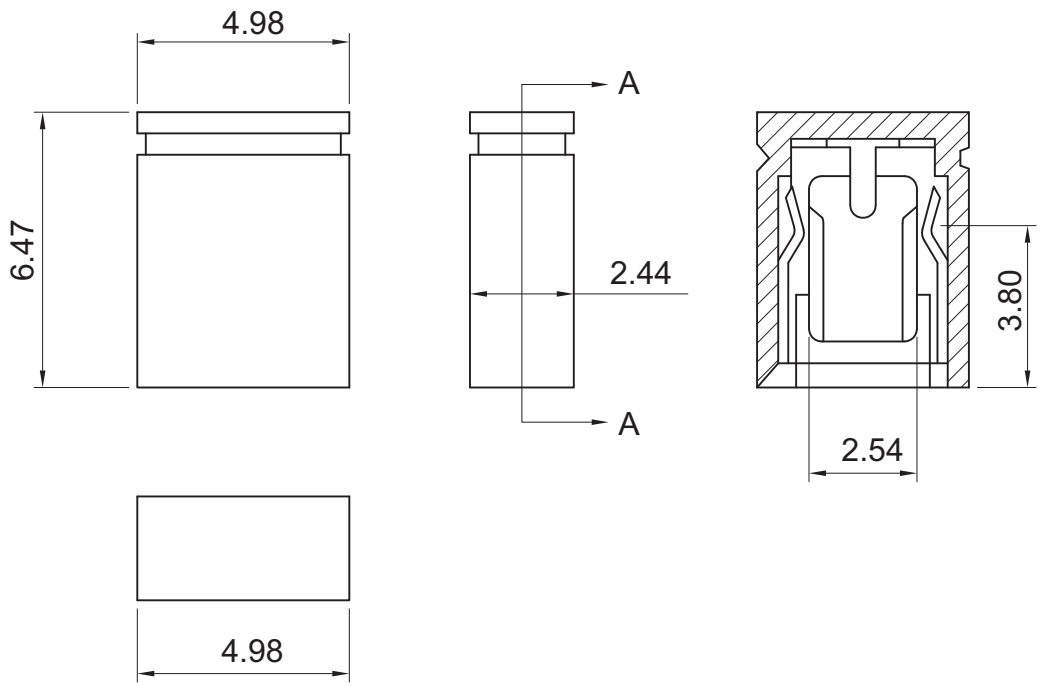

Contact Point

Material:
- Insulation: Glass Filled PBT, UL94V-0
- Contact: Phosphor Bronze

Electrical:
- Current Rating: 3.0A Max.
- Contact Resistance: 30MΩ Max.
- Insulation Resistance: 1,000MΩ Min.
- Dielectric Voltage: 500V R.M.S. @1min.
- Operating and Storage Temperature: -40°C~+105°C

Unit: MM±0.25MM

RoHS Complaint

Scale	1:1
TOLERANCE	
X.X	±0.40
X.XX	±0.25
X.XXX	±0.15
Angle	±3°

Modification	Date	Name

		Name
Drawn	11.11.11	Chappell
Approved		

ASSMANN WSW components

Item No.
AKSCT-G-BLK-30-R

Title
Mini Jumper - Closed Housing type, 2.54MM pitch, 30μ" contact plating

Drawing No.

rev00

Replace

Sheet