6-18GHz 4-Way Power Divider

Electrical specifications:

No.	Parameter	Minimum	Typical	Maximum	Units
1	Frequency range	6	-	18	Ghz
2	Isolation	16	-	-	dB
3	Insertion Loss	-	-	0.8	dB
4	VSWR input			1.7	
	VSWR output			1.7	
5	Phase Unbalance			8	°
6	Amplitude Unbalance			0.8	dB
7	Forward Power			10	W cw
	Reverse Power			1	W cw
8	Operating Temperature Range	-55	-	+85	˚C
9	Impedance	-	50	-	Ω
10	Finish	Gray Plainted			

Outline Drawing:

All Dimensions in mm；Tolerance:±0.5
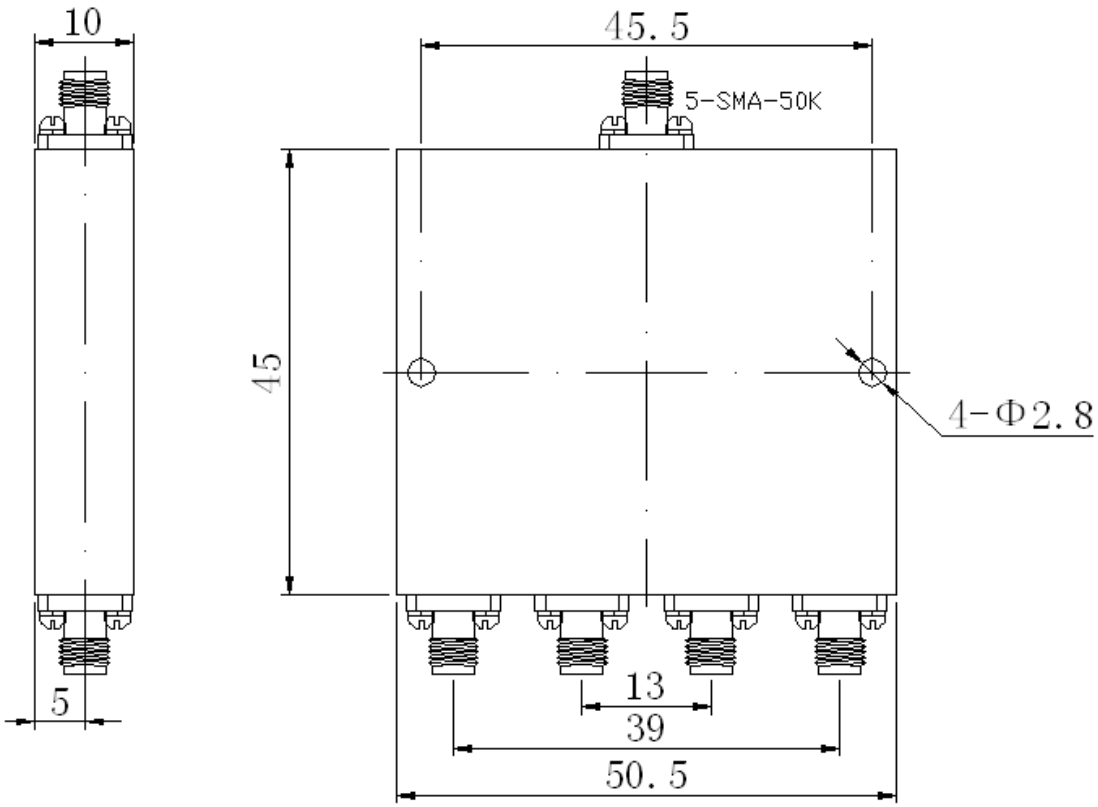
All Connectors: SMA-female