1.SCOPE

Shoulder's SAW filter series have broad line up products meeting all broadcast standard including NTSC,PAL and SECAM systems. These filters are composed of two interdigital transducers on a single-crystal. piezoelectrical chip. they are used in electronic equipments such as TV and so on.

2.Construction

2.1 Dimension and materials

Type : AF38A2M

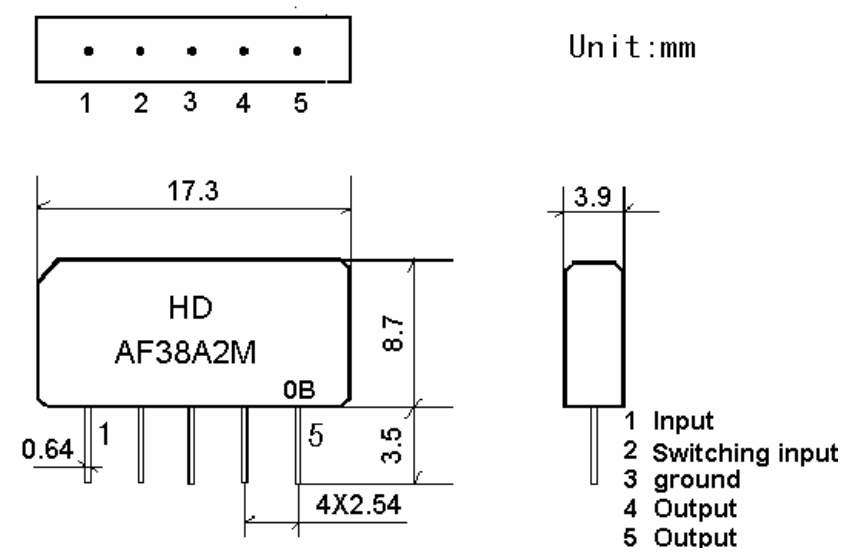

0: year(0,1,2,3,4,5,6,7,8,9)
B:product in this quarter(A:1~3,B:4~6,C:7~9,D:10~12)

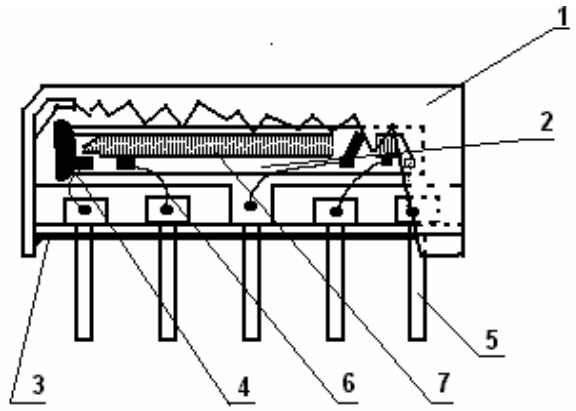

Components	Materials
1.Outer casing	PPS
2.Substrate	Lithium niobate
3.Base	Epoxy resin
4.Absorber	Epoxy resin
5.Lead	Cu alloy+Au plate
6.Bonding wire	AlSi alloy
7.Electrode	Al

2.2. Circuit construction, measurement circuit

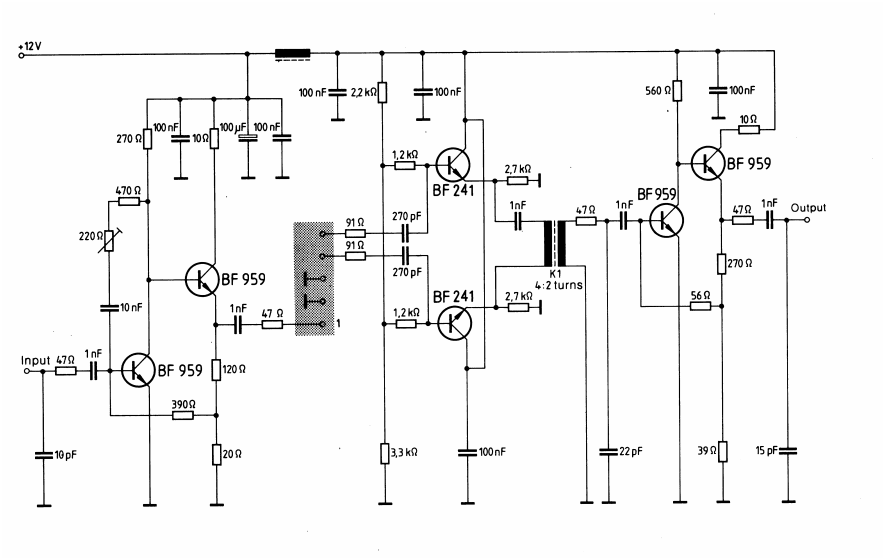

Test circuit for SIP-5 filter
Input impedance of the symmetrical post-amplifier: 2 kΩ in parallel with 3 pF

3.Characteristics

Standard atmospheric conditions

Unless otherwise specified , the standard rang of atmospheric conditions for making measurements and tests is as follows;

Ambient temperature : 15℃ to 35℃
Relative humidity : 25% to 85%
Air pressure : 86kPa to 106kPa

Operating temperature rang

Operating temperature rang is the rang of ambient temperatures in which the filter can be
operated continuously. -10℃ ~ +60℃

Storage temperature rang

Storage temperature rang is the rang of ambient temperatures at which the filter can be stored
without damage.
Conditions are as specified elsewhere in these specifications. -40℃ ~ +70℃

Reference temperature +25℃

3.1 Maximum Rating

DC voltage VDC	**12**	**V**	**Between any terminals**
AC voltage Vpp	**10**	**V**	**Between any terminals**

3.2 Electrical Characteristics

Source impedance Zs=50Ω

Load impedance Z_L=2kΩ//3pF T_A=25℃

Item		Freq	min	typ	max	
Insertion attenuation Reference level		31.50MHz	11.9	13.9	15.9	dB
Relative attenuation		32.50MHz	-1.3	-0.1	1.1	dB
		33.50MHz	-1.0	0.2	1.4	dB
		38.00MHz	40.0	50.0	-	dB
		30.00MHz	40.0	55.0	-	dB
		39.50MHz	40.0	52.0	-	dB
		40.00MHz	40.0	48.0	-	dB
		40.500MHz	40.0	55.0	-	dB
Sidelobe	25.00~30.00MHz		35.0	42.0	-	dB
	38.00~45.00MHz		36.0	45.0	-	dB
Temperature coefficient			-72			ppm/k

3.3 Environmental Performance Characteristics

Item Test condition	Allowable change of absolute Level at center frequency(dB)
High temperature test 70℃ 1000H	< 1.0
Low temperature test -40℃ 1000H	< 1.0
Humidity test 40℃ 90-95% 1000H	< 1.0
Thermal shock -20℃==25℃==80℃ 20 cycle 30M 10M 30M	< 1.0
Solder temperature test Sold temp.260℃ for 10 sec.	< 1.0
Soldering Immerse the pins melt solder at 260℃+5/-0℃ for 5 sec.	More then 95% of total area of the pins should be covered with solder

3.4 Mechanical Test

Item Test condition	Allowable change of absolute Level at center frequency(dB)
Vibration test 600-3300rpm amplitude 1.5mm 3 directions 2 H each	<1.0
Drop test On maple plate from 1 m high 3 times	<1.0
Lead pull test Pull with 1 kg force for 30 seconds	<1.0
Lead bend test 90° bending with 500g weigh 2 times	<1.0

3.5 Voltage Discharge Test

Item Test condition	Allowable change of absolute Level at center frequency(dB)
Surge test Between any two electrode 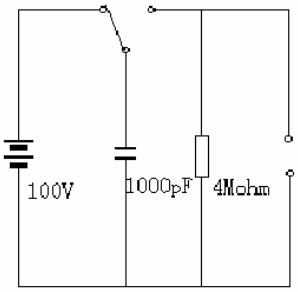 	<1.0

3.6 Frequency response

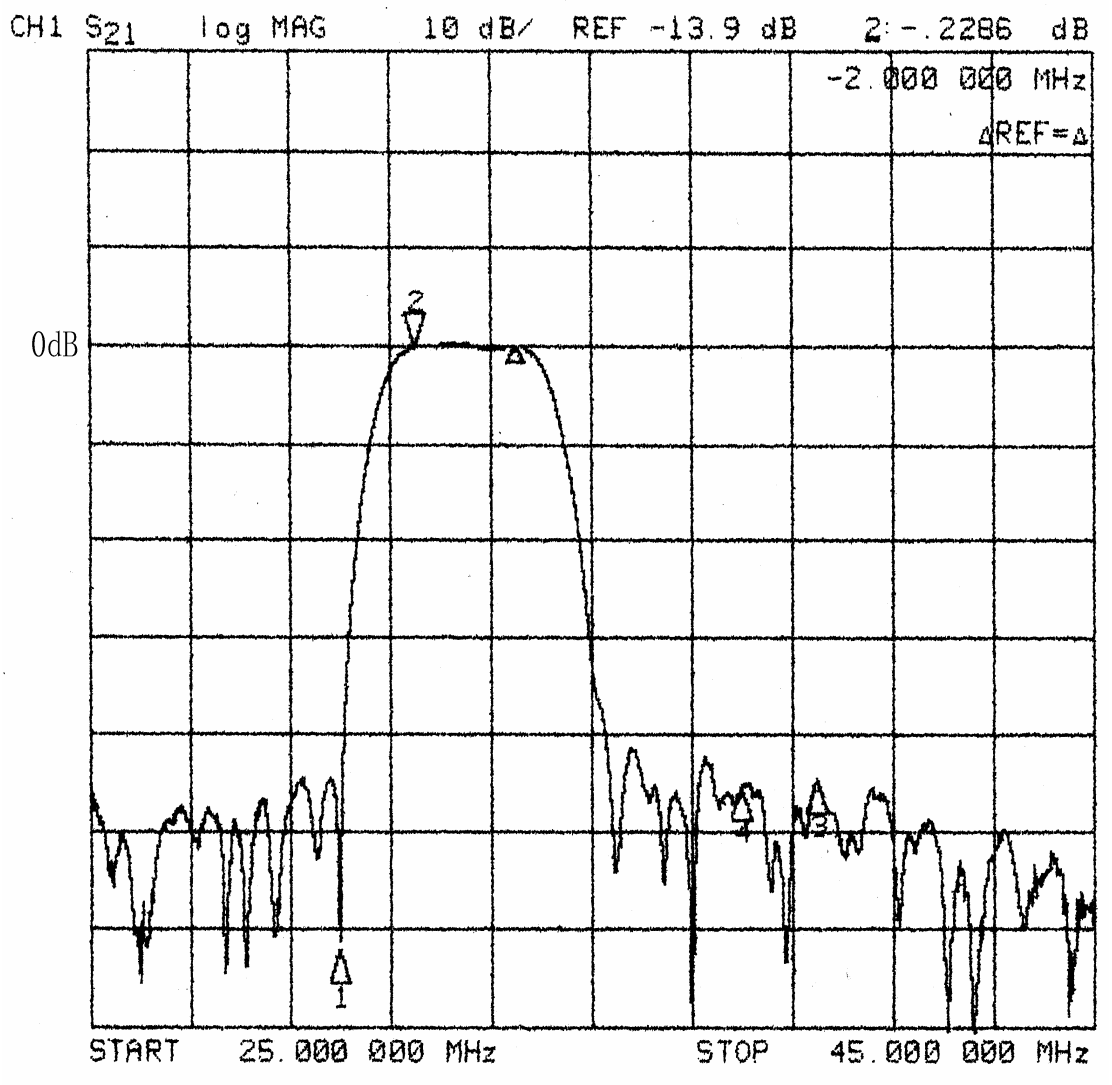

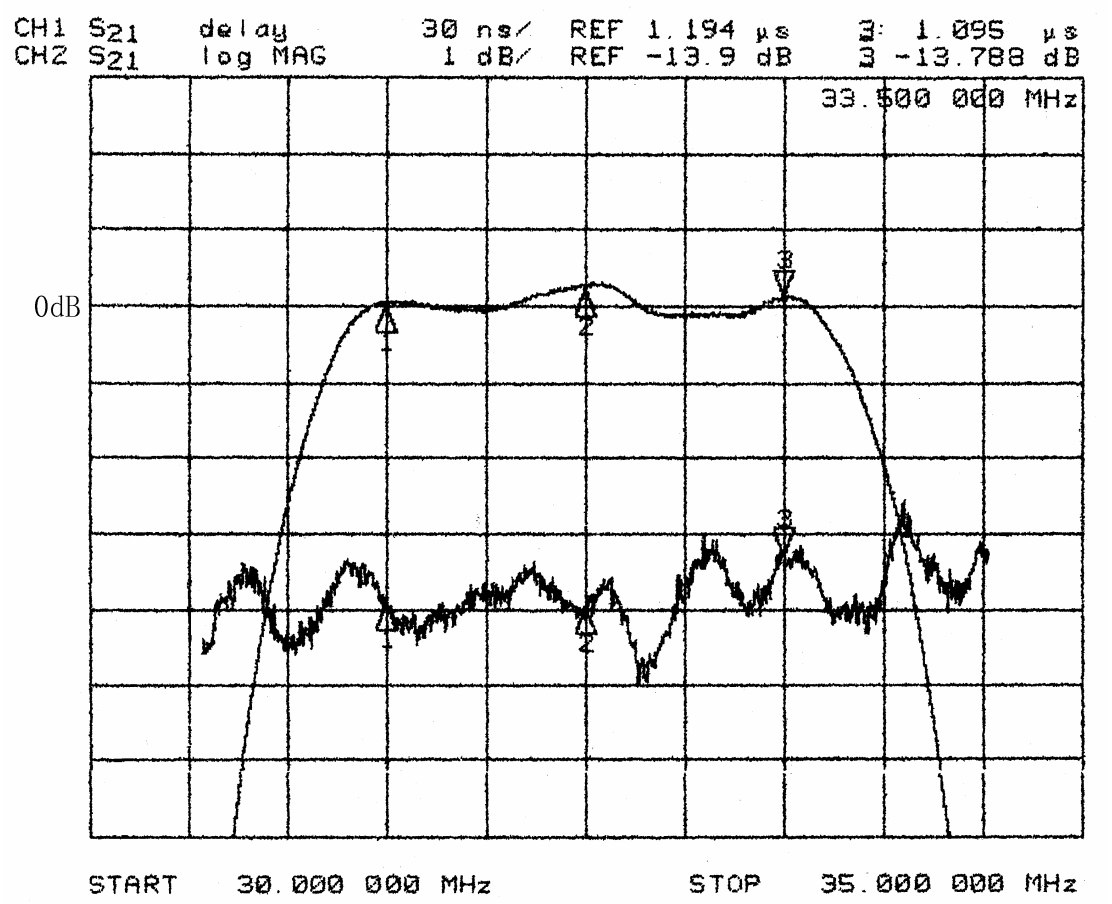
CH1 S21 delay 30 ns/ REF 1.194 µs 3: 1.095 µs
CH2 S21 log MAG 1 dB/ REF -13.9 dB 3 -13.788 dB
33.500 000 MHz
0dB
START 30.000 000 MHz
STOP 35.000 000 MHz