# CMD108-02
# AMPS Duplexer

Revision 2, April 23, 2008

| Receive Channel | | Transmit Channel | |
|---|---|---|---|
| Passband: | 824 – 849 MHz | Passband: | 869 - 894 MHz |
| Insertion Loss: | 2.0 dB max. | Insertion Loss: | 1.0 dB max. |
| Return Loss: | 14.0 dB min. | Return Loss: | 21.0 dB min. |
| Rejection: | | Rejection: | |
| DC – 812 MHz | 20 dB min. | DC – 849 MHz | 85 dB min |
| 851 – 869 MHz | 20 dB min. | 849 – 859 MHz | 25 dB min. |
| 869 – 894 MHz | 80 dB min. | 904 – 941 MHz | 20 dB min. |
| Isolation Tx to Rx: | 80 dB min. | Isolation Rx to Tx: | 85 dB min. |

| | |
|---|---|
| Operation Temp: | 0° to +60°C |
| Storage Temp: | -40° to +85°C |

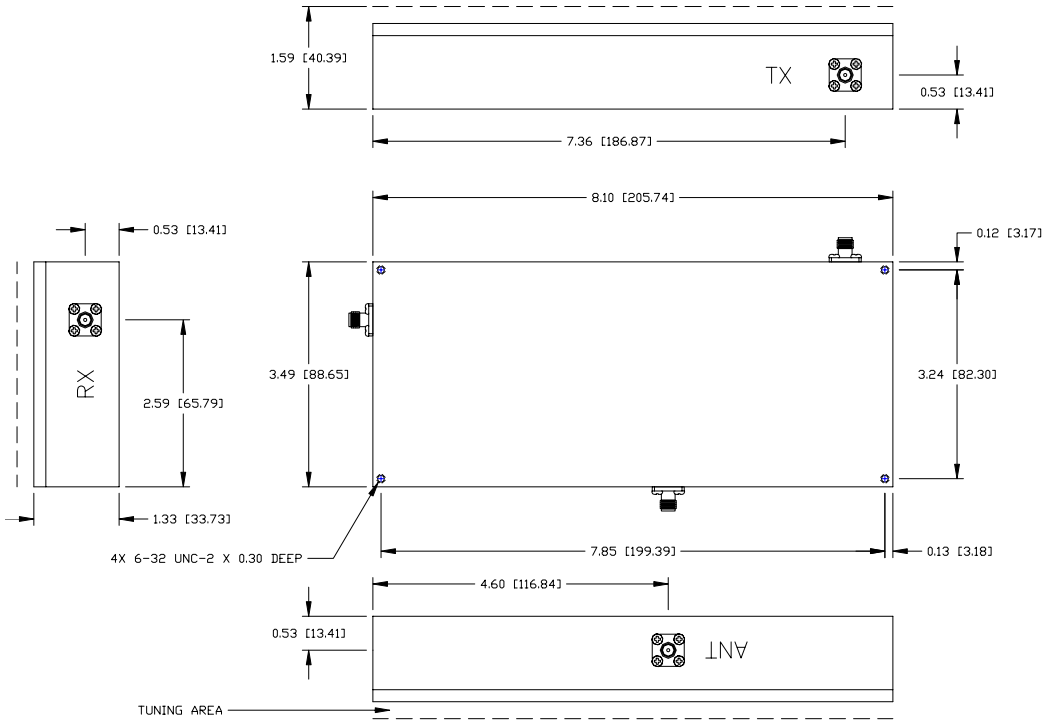



**Commercial Microwave Technology, Inc.**
11335 Sunrise Gold Circle, Rancho Cordova, CA 95742
Phone: 916-631-4363 • Fax: 916-631-4364
www.cmtfilters.com