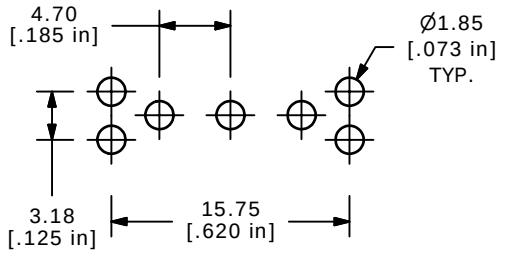

P.C. MOUNTING

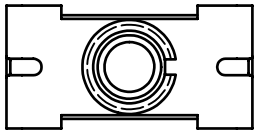

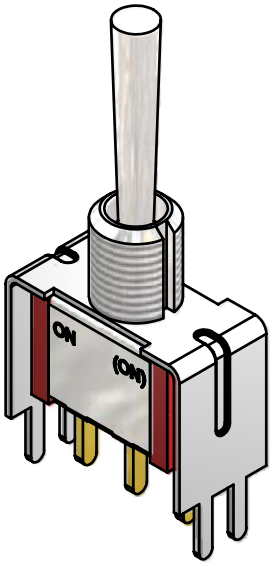

▲ SWITCH FUNCTION		
POS. 1	POS. 2	POS. 3
ON	NONE	(ON)
2-3	N/A	2-1

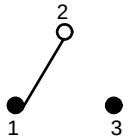

CIRCUIT: SPDT

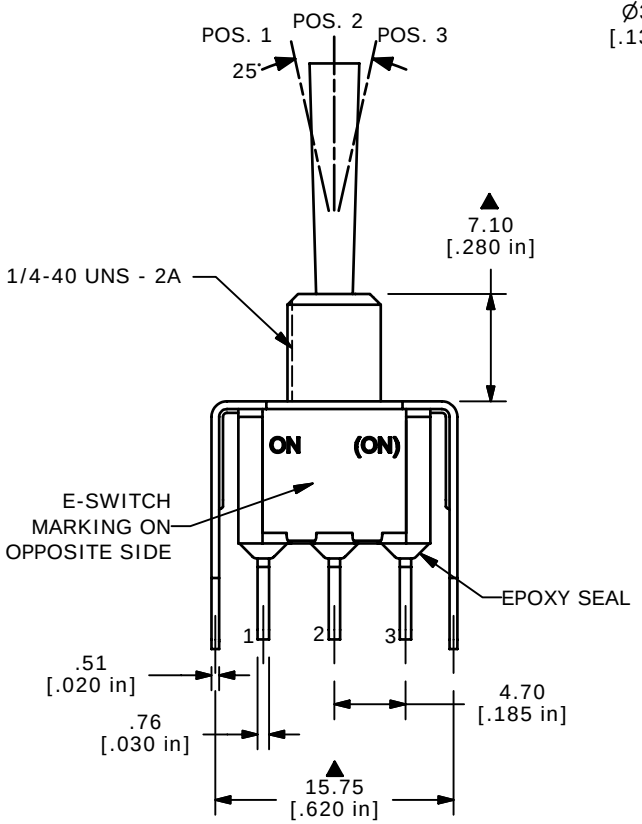

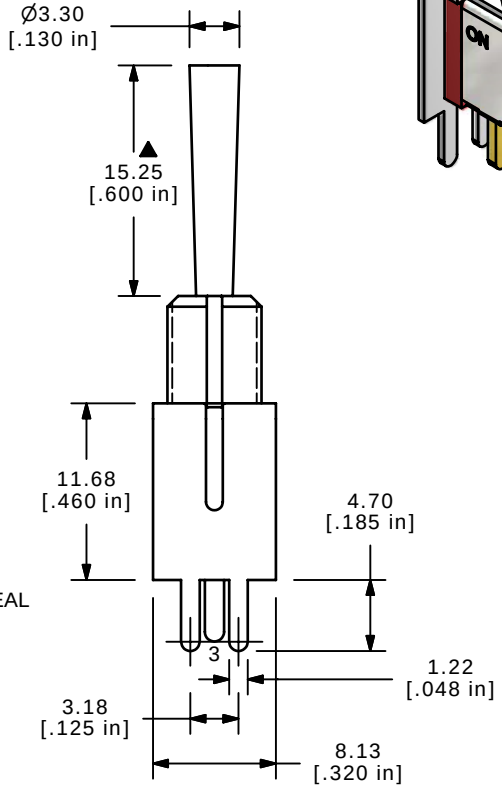

NOTE:
1. ALL DIMENSIONS IN MM [INCH]
2. GENERAL TOLERANCE: X.X=±0.4
   X.XX=±0.25
3. TERMINAL NUMBERS FOR REF ONLY
▲4. CONTACT MATERIAL: SILVER
5. RATING: 2A @ 250 VAC
   5A @ 120 VAC OR 28 VDC
6. ELECTRIC LIFE: 40,000 make-and-break cycles
   at full load.
7. INSULATION RESISTANCE: 1,000 Mega-ohm min.
8. DIELECTRIC STRENGTH: 1,000 V RMS @sea level.
9. OPERATING TEMP.: -30°C to 85°C
10. ▲ DENOTES CRITICAL PARAMETER.
11. 2002/95/EC (ROHS) COMPLIANT

REV	PCR NO	DESCRIPTION	DATE	BY
A	16374	RELEASED FOR PRODUCTION	8/24/06	BO

THE INFORMATION CONTAINED IN THIS DOCUMENT IS PROPRIETARY TO E-SWITCH AND IS NOT TO BE COPIED OR TRANSFERRED

E-SWITCH®

TITLE 100SP2T3B3VS2QE

SCALE	DATE	DR	DWG	REV
2:1	8/24/2006	BO	T112001	A