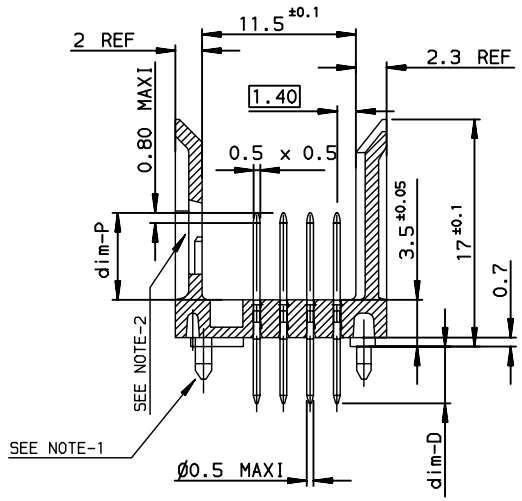

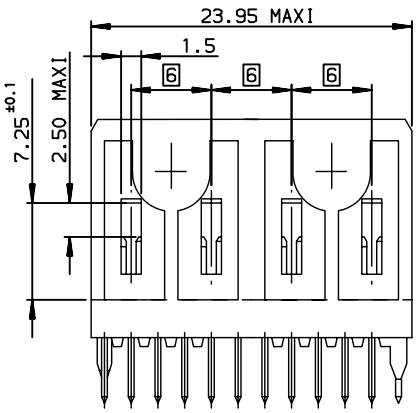

LAYOUT FOR P.C.B

CONNECTOR SIDE VIEW

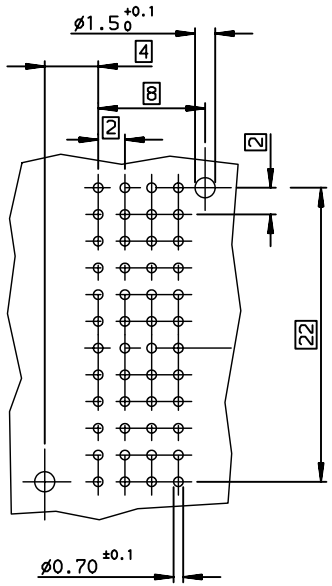

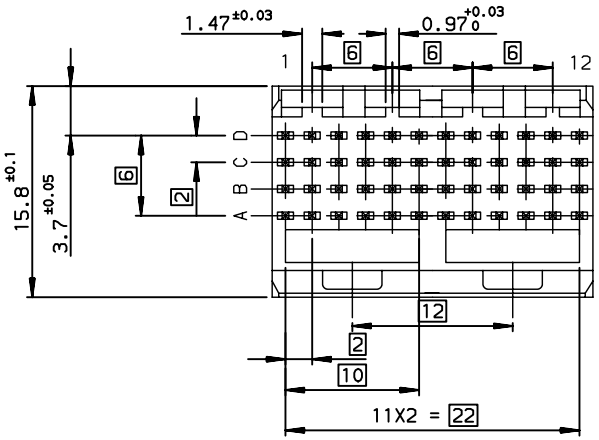

Part number: HM1W42xyR000Hz / HM1W42xyR040Hz					
Replace x by (dim-P ±0.10)					Replace y by
	ROW-A	ROW-B	ROW-C	ROW-D	
A =	5.00	5.00	5.00	5.00	T if dim-D = 4.25±0.25
B =	6.50	5.00	5.00	5.00	B if dim-D = 3.60±0.25
C =	6.50	5.75	5.75	6.50	Replace z by (Performance level)
D =	6.50	6.50	6.50	6.50	
E =	5.75	7.25	5.75	5.75	7: 2µ gold mini 4 sides
H =	8.00	8.00	7.25	6.50	
K =	6.50	8.00	6.50	6.50	6: if PL1
L =	5.75	5.75	5.75	5.75	5: if PL2
M =	7.25	7.25	7.25	7.25	4: if PL3
N =	8.00	8.00	8.00	8.00	(*) - 040H0

(*) - ACCORDING TO BELLCORE SPECIFICATION (4 GAZES)

Part number: HM1W42xyR000HzLF / HM1W42xyR040HzLF					
Replace x by (dim-P ±0.10)					Replace y by
	ROW-A	ROW-B	ROW-C	ROW-D	
A =	5.00	5.00	5.00	5.00	T if dim-D = 4.25±0.25
B =	6.50	5.00	5.00	5.00	B if dim-D = 3.60±0.25
C =	6.50	5.75	5.75	6.50	Replace z by (Performance level)
D =	6.50	6.50	6.50	6.50	
E =	5.75	7.25	5.75	5.75	7: 2µ gold mini 4 sides
H =	8.00	8.00	7.25	6.50	
K =	6.50	8.00	6.50	6.50	6: if PL1
L =	5.75	5.75	5.75	5.75	5: if PL2
M =	7.25	7.25	7.25	7.25	4: if PL3
N =	8.00	8.00	8.00	8.00	(*) - 040H0

(*) - ACCORDING TO BELLCORE SPECIFICATION (4 GAZES)

GENERAL CHARACTERISTICS: SEE DRAWING REF C-8626-000S
NOTE-1: 2 PEGS AT EACH END ONLY
NOTE-2: CAVITY FOR CODING KEY MOUNTING AND CABLE CONNECTOR LATCH

REDUCED SCALE SHEET

European Views

RoHS:
For RoHS information see GS-22-yyy
Note: Y: The housing will withstand exposure to xxxx °C peak temperature for xxx seconds in a wave solder application with a xxx mm minimum thick circuit board. See application notes/procedures if they are available.

rev	ecn no	dr	date
E	-	GRI	2001/05/09
F	LS06-0132	JTA	2006/08/28
-	-	-	-
-	-	-	-
-	-	-	-
-	-	-	-
-	-	-	-

www.fciconnect.com	surface ISO 1302	tolerance std ISO 406 ISO 1101
	TOLERANCES UNLESS OTHERWISE SPECIFIED	
Dr CHAMPION 1991/30/07	ANGULAR	LINEAR 0.X ±0.1
Eng GRIVEAU 2001/05/09		0.XX ±0.1
Chr LEGARE 2001/05/09	0.XX° ±2°	0.XXX ±0.1
Appr LEGARE 2001/05/09	Product family	METRAL

projection | mm | size A3 | Scale 2.5 | ECN LS06-0132 | Spec ref -

title: METRAL STRAIGHT HEADER
48 WAY SOLDER TAILS/WB

dwg no C-8626-0014 | Rev. F

catalog no - | CUSTOMER | sheet 1 of 1

Copyright FCI.