MOTOROLA

1N3208 thru 1N3212

MEDIUM-CURRENT RECTIFIERS

. . . for applications requiring low forward voltage drop and rugged construction

- High Surge Handling Ability
- Rugged Construction
- Reverse Polarity Available, Eliminates Need for Insulating Hardware in Many Cases
- Hermetically Sealed

15-AMP RECTIFIERS

SILICON
DIFFUSED-JUNCTION

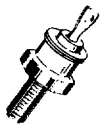

3

***MAXIMUM RATINGS**

Rating	Symbol	1N3208 1N3208R	1N3209 1N3209R	1N3210 1N3210R	1N3211 1N3211R	1N3212 1N3212R	Unit
DC Blocking Voltage	V_R	50	100	200	300	400	Volts
RMS Reverse Voltage	$V_{R(RMS)}$	35	70	140	210	280	Volts
Average Half-Wave Rectified Forward Current With Resistive Load	I_O**	15	15	15	15	15	Amp
Peak One Cycle Surge Current (60 Hz and 25°C Case Temperature)	I_{FSM}	250	250	250	250	250	Amp
Operating Junction Temperature	T_J	← -65 to +175 →					°C
Storage Temperature	T_{stg}	← -65 to +175 →					°C

***ELECTRICAL CHARACTERISTICS** (All Types) at 25°C Case Temperature

Characteristic	Symbol	Value	Unit
Maximum Forward Voltage at 40 Amp DC Forward Current	V_F	1.5	Volts
Maximum Reverse Current at Rated DC Reverse Voltage	I_R	1.0	mAdc

THERMAL CHARACTERISTICS

Characteristic	Symbol	Typical	Unit
Thermal Resistance, Junction to Case	$R_{\theta JC}$	1.7	°C/W

*Indicates JEDEC registered data.
**T_C = 150°C

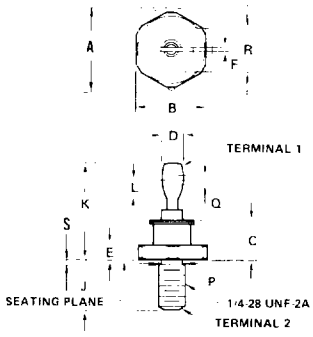

DIM	MILLIMETERS MIN	MAX	INCHES MIN	MAX
A	–	20.07	–	0.790
B	16.94	17.45	0.669	0.687
C	–	11.43	–	0.450
D	–	9.53	–	0.375
E	2.92	5.08	0.115	0.200
F	–	2.03	–	0.080
J	10.72	11.51	0.422	0.453
K	19.05	25.40	0.750	1.000
L	3.96	–	0.156	–
P	5.59	6.32	0.220	0.249
Q	3.56	4.45	0.140	0.175
R	–	16.94	–	0.667
S	–	2.26	–	0.089

CASE 42A-01

MECHANICAL CHARACTERISTICS

CASE: Welded hermetically sealed construction
FINISH: All external surfaces corrosion-resistant and the terminal lead is readily solderable
WEIGHT: 25 grams (approx.)
POLARITY: Cathode connected to case (reverse polarity available denoted by Suffix R, ie 1N3212R)
MOUNTING POSITION: Any