1.SCOPE

The SAW filter series have broad line up products meeting all broadcast standard including NTSC, PAL and SECAM systems. These filters are composed of two inter-digital transducers on a single-crystal piezo-electrical chip. They are used in electronic equipments such as TV and so on.

2.Construction

2.1 Dimension and materials

Type: BF36A1M

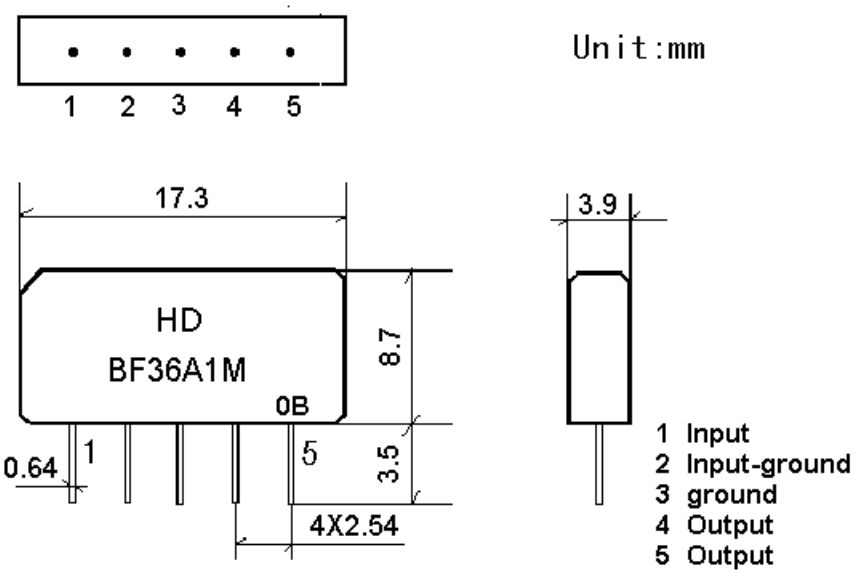

0: year (0,1,2,3,4,5,6,7,8,9)
B:product in this quarter(A:1~3,B:4~6,C:7~9,D:10~12)

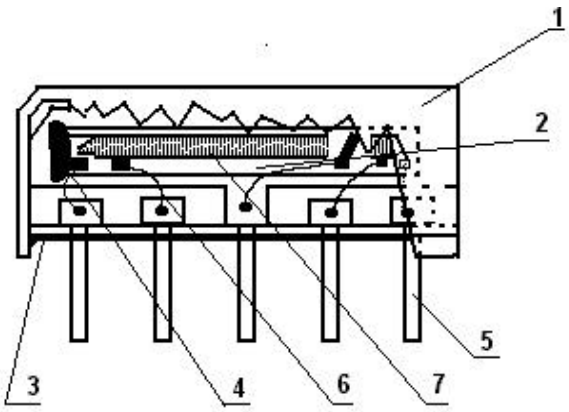

Components	Materials
1.Outer casing	PPS
2.Substrate	Lithium niobate
3.Base	Epoxy resin
4.Absorber	Epoxy resin
5.Lead	Cu alloy+Au plate
6.Bonding wire	AlSi alloy
7.Electrode	Al

2.2. Circuit construction, measurement circuit

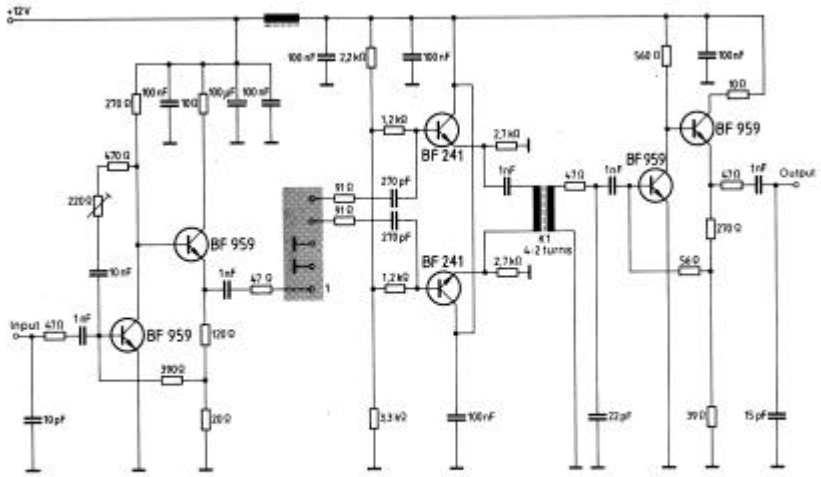

Test circuit for SIP-5 filter
Input impedance of the symmetrical post-amplifier: 2 kΩ in parallel with 3 pF

3.Characteristics

Standard atmospheric conditions

Unless otherwise specified , the standard rang of atmospheric conditions for making measurements and tests is as follows;

Ambient temperature : 15C to 35C
Relative humidity : 25% to 85%
Air pressure : 86kPa to 106kPa

Operating temperature rang

Operating temperature rang is the rang of ambient temperatures in which the filter can be
operated continuously. -10C ~ +60C

Storage temperature rang

Storage temperature rang is the rang of ambient temperatures at which the filter can be stored
without damage.
Conditions are as specified elsewhere in these specifications. -40C ~ +70C

Reference temperature +25C

3.1 Maximum Rating

DC voltage VDC	**12**	**V**	**Between any terminals**
AC voltage Vpp	**10**	**V**	**Between any terminals**

3.2 Electrical Characteristics

Source impedance Zs=50 ohm

Load impedance Z_L=2k ohm//3pF T_A=25C

Item		Freq	min	typ	max	
Center frequency		Fo	-	36.125	-	MHz
Insertion attenuation Reference level		36.125MHz	18.3	20.3	22.3	dB
Amplitude ripple: 32.65~39.60 MHz			0.0	0.6	1.2	dB
Pass bandwidth		B3dB	-	8.0	-	MHz
		B30dB	-	9.4	-	MHz
Relative attenuation		32.32MHz	-0.6	0.9	2.4	dB
		39.93MHz	-0.1	1.4	2.9	dB
		32.13MHz	0.9	2.7	4.5	dB
		31.25MHz	35.0	45.0	-	dB
		47.25MHz	40.0	52.0	-	dB
Sidelobe	25.00~31.25MHz		30.0	40		dB
	40.90~50.00MHz		30.0	38		dB
Temperature coefficient			-72			ppm/k

3.3 Environmental Performance Characteristics

Item Test condition	Allowable change of absolute Level at center frequency(dB)
High temperature test 70℃ 16H ,	< 1.0
Low temperature test -25℃ 2H	< 1.0
Humidity test 40℃ 90-95% 100H	< 1.0
Thermal cycle -25C==70C 3cycle 30min. 5min. 30min.	< 1.0
Solder temperature test Sold temp.260C for 10 sec.	< 1.0
Soldering Immerse the pins melt solder at 260C+5/-0C for 5 sec.	More then 95% of total area of the pins should be covered with solder

3.4 Mechanical Test

Item Test condition	Allowable change of absolute Level at center frequency(dB)
Vibration test Frequency 10~55Hz amplitude 1.5mm 3 directions 2 H each	<1.0
Drop test On maple plate frome 1 m high 3 times	<1.0
Lead pull test Pull with 1 kg force for 30 seconds	<1.0
Lead bend test 90° bending with 500g weigh 2 times	<1.0

3.5 Voltage Discharge Test

Item Test condition	Allowable change of absolute Level at center frequency(dB)
Surge test Between any two electrode 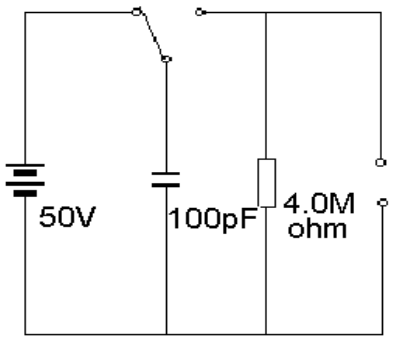 	<1.0

3.6 Frequency response

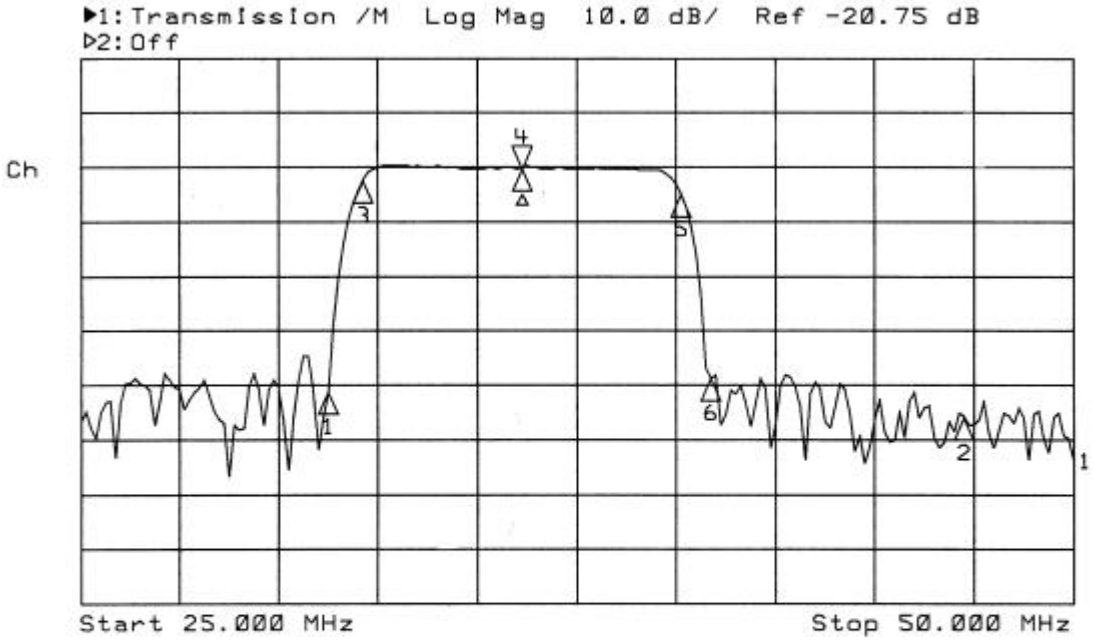

Mkr	ΔFreq (MHz)	Ch 1 (dB)	Freq (MHz)	Ch 2 (dB)
1	-4.875	-41.12		
2	11.125	-45.78		
3	-3.995	-2.10		
4	0.000	0.00		
5	4.005	-4.82		
6	4.775	-38.51		
7				
8				

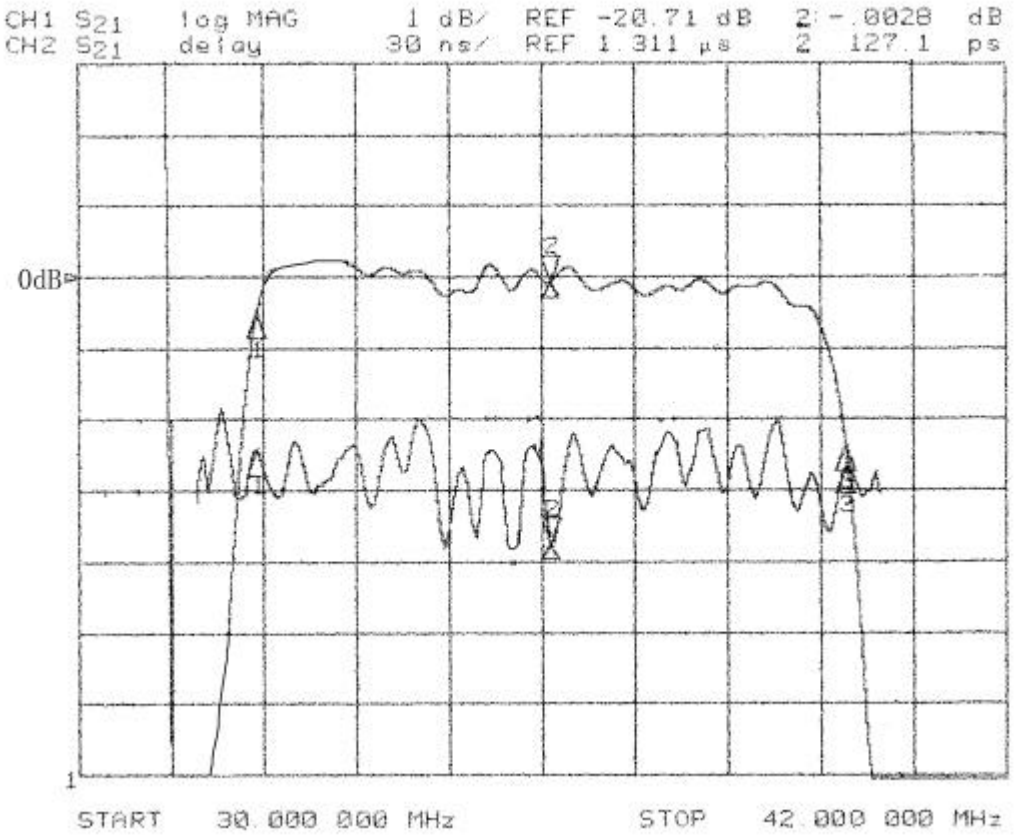

▶1:Transmission /M Log Mag 10.0 dB/ Ref -21.32 dB