REVISION H

THIS PRODUCT MANUFACTURED WITH LEAD-FREE PROCESSING

DO NOT SCALE FROM THIS PRINT

EEDP-XXX-XX.XX-XXX-XXX-X

- No OF PAIRS: -008, -016, -024 (SEE SHEET 5), -032 (SEE TABLE 8, SHEET 7)
- LENGTH: -XX.XX (INCHES) (06.00[152.4] MIN - 40.00[1016.0] MAX) (SEE NOTE 2)
- FIRST END: -DV1: DOUBLE VERTICAL; -DV2: DOUBLE VERTICAL (FLIPPED); -DS1: DV1 WITH CAPTIVE PANEL SCREWS; -DS2: DV2 WITH CAPTIVE PANEL SCREWS; -RA1: RIGHT ANGLE (SHROUD UP); -RA2: RIGHT ANGLE (SHROUD DOWN); -RS1: RA1 WITH CAPTIVE PANEL SCREWS; -RS2: RA2 WITH CAPTIVE PANEL SCREWS; -LV1: DV1 WITH LATCHES (SEE SHEET 6); -LV2: DV2 WITH LATCHES (SEE SHEET 6); -RL1: RIGHT ANGLE W/ LACTHES (SHROUD UP); -RL2: RIGHT ANGLE W/ LACTHES (SHROUD DOWN) (SEE SHEET 2)(SEE TABLE 9, SHEET 7)
- SECOND END: -DV1: DOUBLE VERTICAL; -DV2: DOUBLE VERTICAL (FLIPPED); -DS1: DV1 WITH CAPTIVE PANEL SCREWS; -DS2: DV2 WITH CAPTIVE PANEL SCREWS; -RA1: RIGHT ANGLE (SHROUD UP); -RA2: RIGHT ANGLE (SHROUD DOWN); -RS1: RA1 WITH CAPTIVE PANEL SCREWS; -RS2: RA2 WITH CAPTIVE PANEL SCREWS; -LV1: DV1 WITH LATCHES (SEE SHEET 6); -LV2: DV2 WITH LATCHES (SEE SHEET 6); -RL1: RIGHT ANGLE W/ LACTHES (SHROUD UP); -RL2: RIGHT ANGLE W/ LACTHES (SHROUD DOWN) (SEE SHEET 3)(SEE TABLE 9, SHEET 7)
- WIRING OPTION: -1: PIN 1 TO PIN 1; -2: PIN 1 TO PIN 2; -3: PIN 1 TO PIN N-1; -4: PIN 1 TO PIN N (SEE TABLE 3, SHEET 4 FOR -008, -016, -032; SEE TABLE 5, SHEET 5 FOR -024)

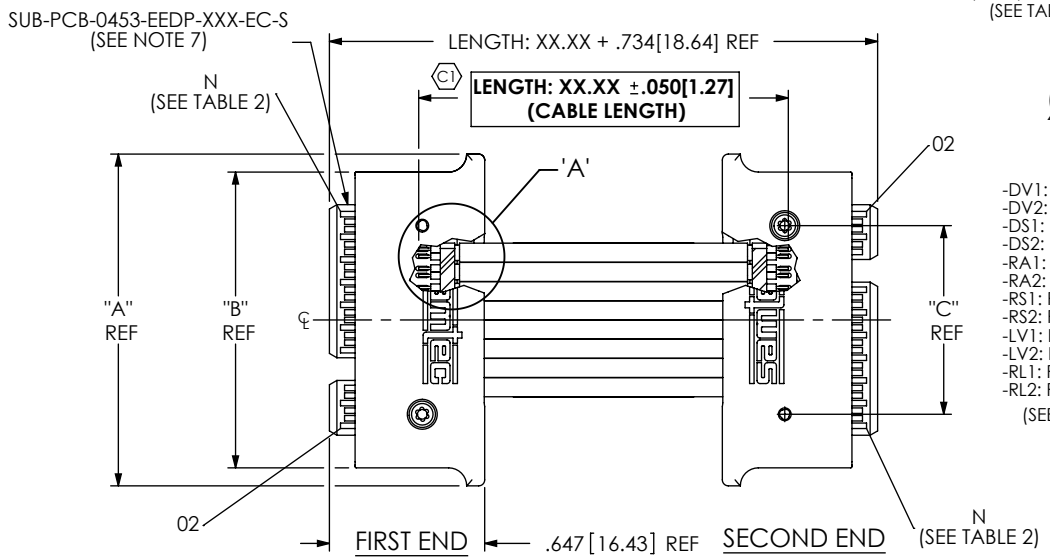

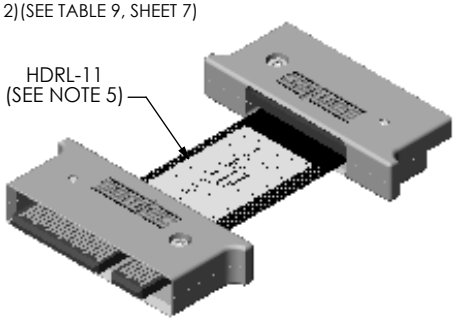

FIG. 1
EEDP-016-XX.XX-3-DV1-RA1 SHOWN

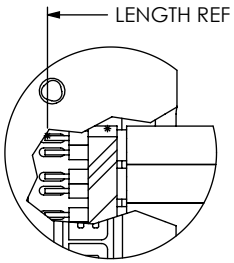

DETAIL 'A'
SCALE 2.5 : 1

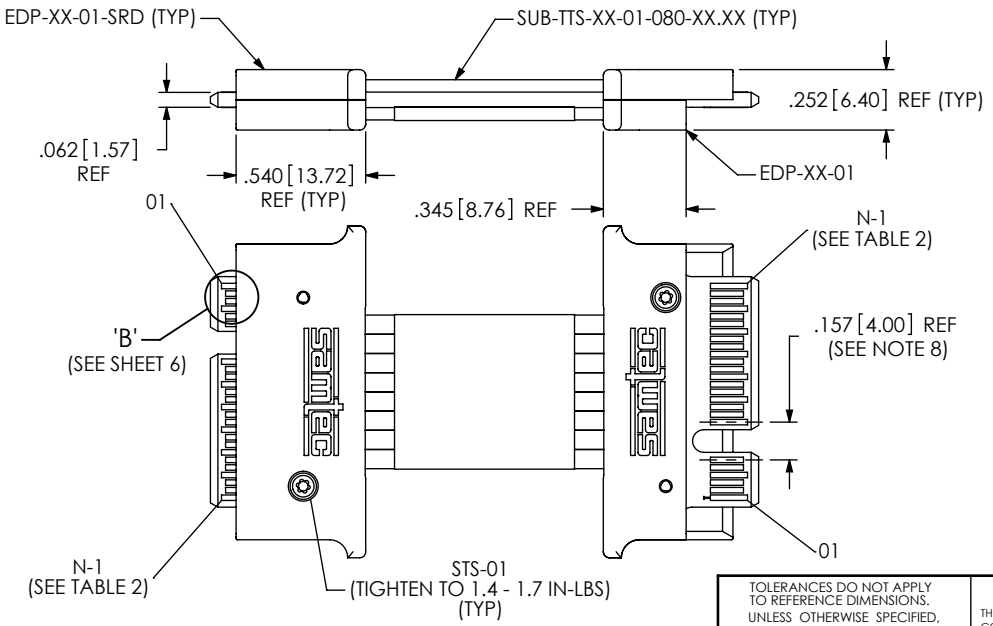

NOTES:

1. C1 REPRESENTS A CRITICAL DIMENSION.
2. SUB-TTS LENGTH IS EQUAL TO EEDP LENGTH.
3. C2 ALL ASSEMBLIES TO BE 100% ELECTRICALLY TESTED FOR SHORTS AND OPENS.
4. C3 ALL ASSEMBLIES TO BE 100% HI-POT TESTED AT 300V.
5. TOP SUB-TTS NOT SHOWN IN THIS VIEW FOR CLARITY; HDRL-11 TO BE CENTERED ON LOWER SUB-TTS AS SHOWN; HDRL-11 IS TO CONTAIN PART NUMBER, SHOP NUMBER, LINE NUMBER & DATE CODE.
6. PACKAGE ASSEMBLIES IN STATIC DISSIPATION BAGS.
7. FOR PRE-TINNING PROCESSING INFORMATION ON THE SUB-PCB'S, SEE TRAVELER SUB-PCB-0453-EEDP-"XXX".
8. KEY CONSUMES FOUR PITCHES.
9. LVX OPTION: TIGHTEN TO 1.4-1.5 IN-LBS.

TABLE 2

No. OF PAIRS	N	N-1
-008	26	25
-016	50	49
-024	74	73
-032	98	97

TABLE 1

No. OF PAIRS	"A"	"B"	"C"	EDP-XX-01-XXX	SUB-TTS-XX-01-080-XX.XX	SUB-PCB-0453-EEDP-XXX-EC-X (SEE NOTE 7)
-008	0.965 [24.51]	0.815 [20.70]	0.451 [11.45]	EDP-08-01-XXX	SUB-TTS-04-01-080-XX.XX	SUB-PCB-0453-EEDP-008-EC-X
-016	1.382 [35.10]	1.232 [31.29]	0.786 [19.96]	EDP-16-01-XXX	SUB-TTS-08-01-080-XX.XX	SUB-PCB-0453-EEDP-016-EC-X
-024	1.760 [44.70]	1.610 [40.89]	1.164 [29.56]	EDP-24-01-XXX	SUB-TTS-XX-01-080-XX.XX (SEE FIG. 3, SHEET 5)	SUB-PCB-0453-EEDP-024-EC-X
-032	2.099 [53.31]	1.949 [49.50]	1.483 [37.66]	EDP-32-01-XXX	SUB-TTS-16-01-080-XX.XX	SUB-PCB-0453-EEDP-032-EC-X

F:\DWG\MISC\mktg\EEDP-XXX-XX.XX-XXX-XXX-X-MKT.SLDDRW

TOLERANCES DO NOT APPLY TO REFERENCE DIMENSIONS.
UNLESS OTHERWISE SPECIFIED, DIMENSIONS ARE IN INCHES.
TOLERANCES ARE:
DECIMALS: .XX: ±.01[.3]; .XXX: ±.005[.13]; .XXXX: ±.0020[.051]
ANGLES: 2°

PROPRIETARY NOTE
THIS DOCUMENT CONTAINS INFORMATION CONFIDENTIAL AND PROPRIETARY TO SAMTEC, INC. AND SHALL NOT BE REPRODUCED OR TRANSFERRED TO OTHER DOCUMENTS OR DISCLOSED TO OTHERS OR USED FOR ANY PURPOSE OTHER THAN THAT WHICH IT WAS OBTAINED WITHOUT THE EXPRESSED WRITTEN CONSENT OF SAMTEC, INC.

SAMTEC
520 PARK EAST BLVD, NEW ALBANY, IN 47150
* PHONE: 812.944.6733 FAX: 812.948.5047
e-Mail: INFO@SAMTEC.COM CODE: 55322

MATERIAL: DO NOT SCALE DRAWING SHEET SCALE: 1.25:1

DESCRIPTION: TWIN-AX EDGE CARD CABLE ASSEMBLY

DWG. NO. EEDP-XXX-XX.XX-XXX-XXX-X

BY: BRATCHER 09/25/2003 SHEET 1 OF 8

REVISION H

FIRST END - (SEE TABLE 3, SHEET 4 FOR -008, -016 & -032; SEE TABLE 5, SHEET 5 FOR -024)

-DV1

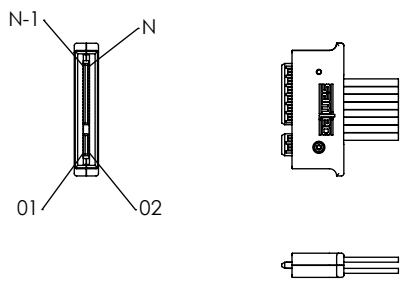

-DV2

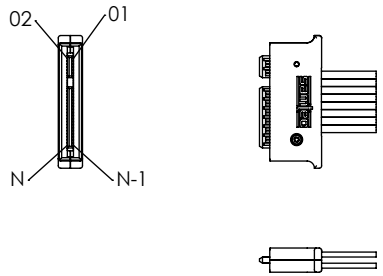

-RA1

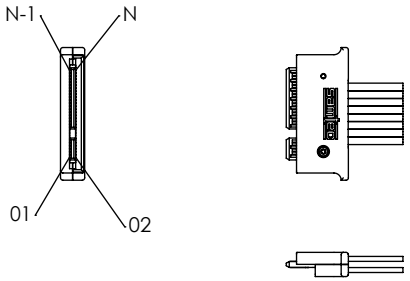

-RA2

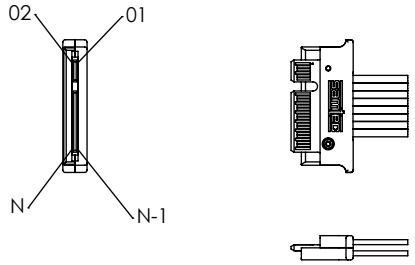

-DS1

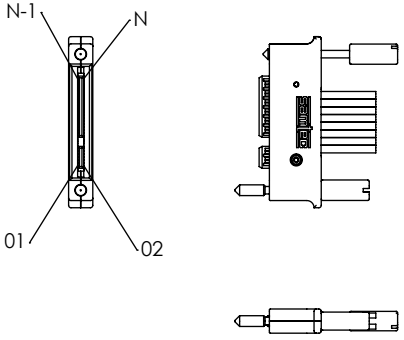

-DS2

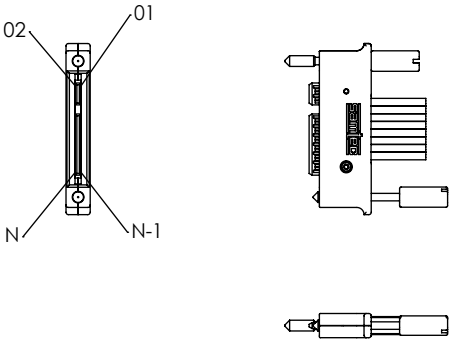

-RS1

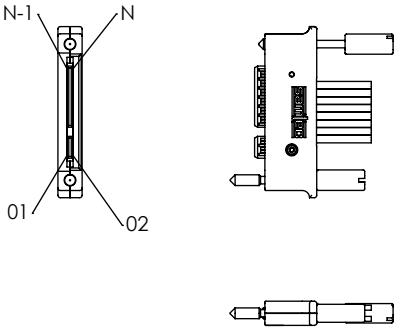

-RS2

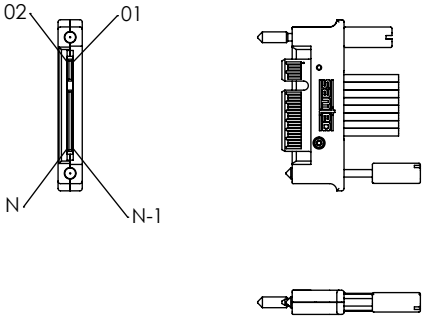

-LV1

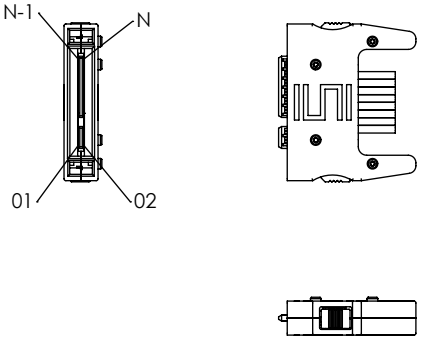

-LV2

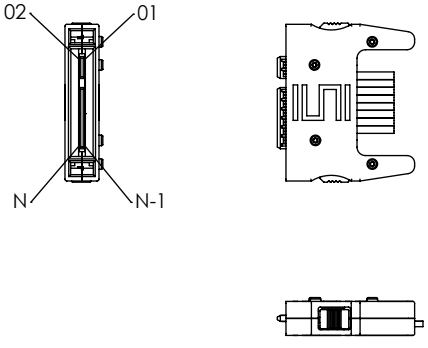

-RL1

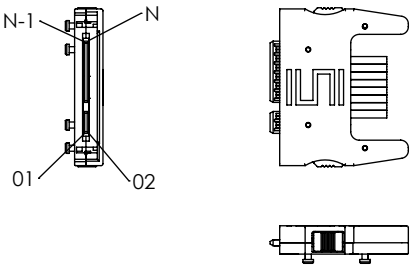

-RL2

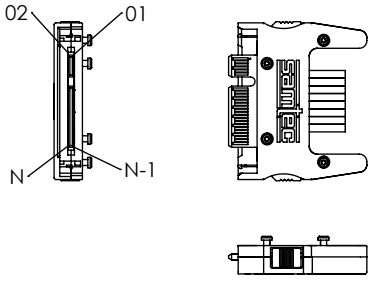

PROPRIETARY NOTE

THIS DOCUMENT CONTAINS INFORMATION CONFIDENTIAL AND PROPRIETARY TO SAMTEC, INC. AND SHALL NOT BE REPRODUCED OR TRANSFERRED TO OTHER DOCUMENTS OR DISCLOSED TO OTHERS OR USED FOR ANY PURPOSE OTHER THAN THAT WHICH IT WAS OBTAINED WITHOUT THE EXPRESSED WRITTEN CONSENT OF SAMTEC, INC.

DO NOT SCALE DRAWING

SHEET SCALE: 1:2

F:\DWG\MISC\mktg\EEDP-XXX-XX.XX-XXX-XXX-X-MKT.SLDDRW

SAMTEC

520 PARK EAST BLVD, NEW ALBANY, IN 47150
* PHONE: 812.944.6733 FAX: 812.948.5047
e-Mail: INFO@SAMTEC.COM CODE: 55322

DESCRIPTION:
TWIN-AX EDGE CARD CABLE ASSEMBLY

DWG. NO.
EEDP-XXX-XX.XX-XXX-XXX-X

BY: BRATCHER 09/25/2003 | SHEET 2 OF 8

REVISION H

SECOND END - (SEE TABLE 3, SHEET 4 FOR -008, -016 & -032; SEE TABLE 5, SHEET 5 FOR -024)

-DV1

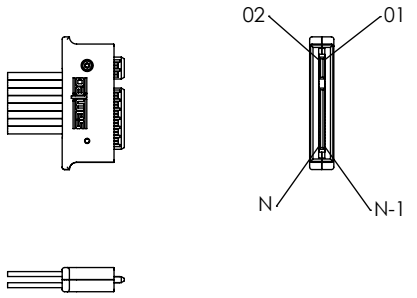

-DV2

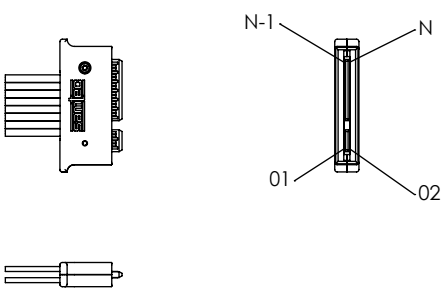

-RA1

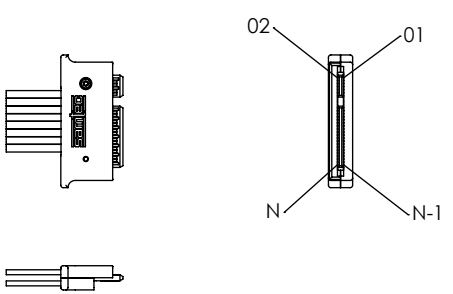

-RA2

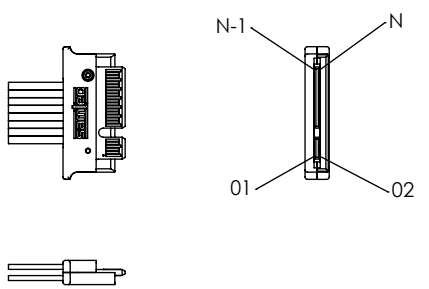

-DS1

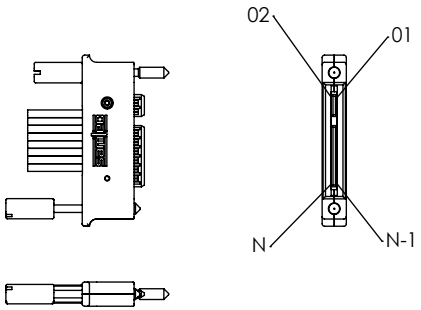

-DS2

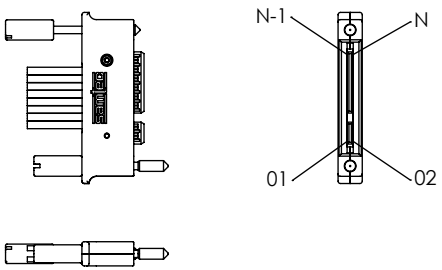

-RS1

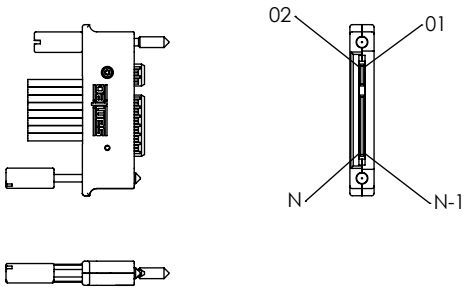

-RS2

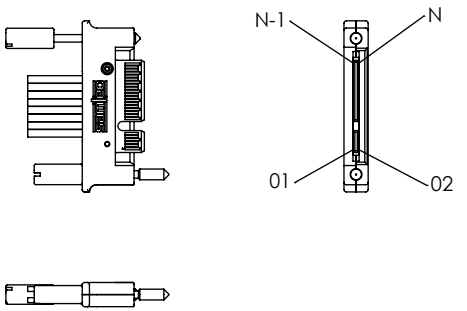

-LV1

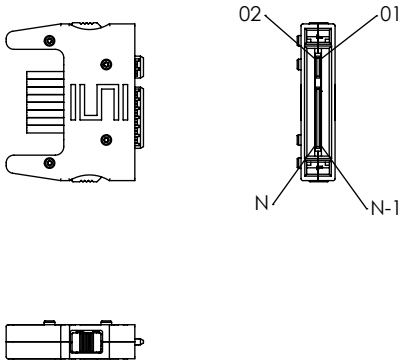

-LV2

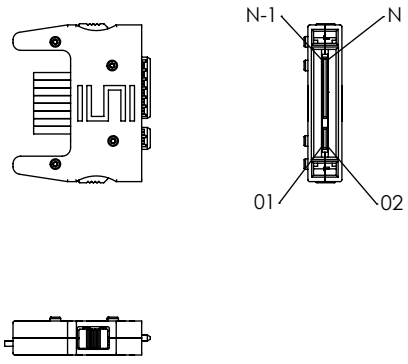

-RL1

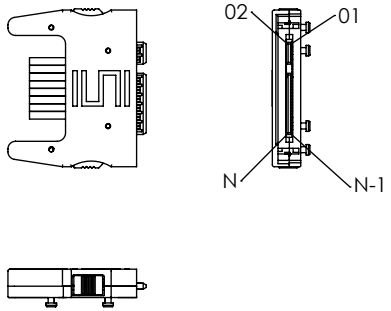

-RL2

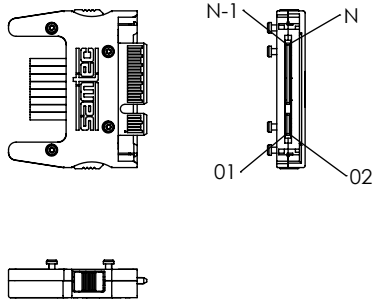

PROPRIETARY NOTE

THIS DOCUMENT CONTAINS INFORMATION CONFIDENTIAL AND PROPRIETARY TO SAMTEC, INC. AND SHALL NOT BE REPRODUCED OR TRANSFERRED TO OTHER DOCUMENTS OR DISCLOSED TO OTHERS OR USED FOR ANY PURPOSE OTHER THAN THAT WHICH IT WAS OBTAINED WITHOUT THE EXPRESSED WRITTEN CONSENT OF SAMTEC, INC.

DO NOT SCALE DRAWING

SHEET SCALE: 1:2

F:\DWG\MISC\mktg\EEDP-XXX-XX.XX-XXX-XXX-X-MKT.SLDDRW

SAMTEC

520 PARK EAST BLVD, NEW ALBANY, IN 47150
* PHONE: 812.944.6733 FAX: 812.948.5047
e-Mail: INFO@SAMTEC.COM CODE: 55322

DESCRIPTION:
TWIN-AX EDGE CARD CABLE ASSEMBLY

DWG. NO.
EEDP-XXX-XX.XX-XXX-XXX-X

BY: BRATCHER 09/25/2003

REVISION H

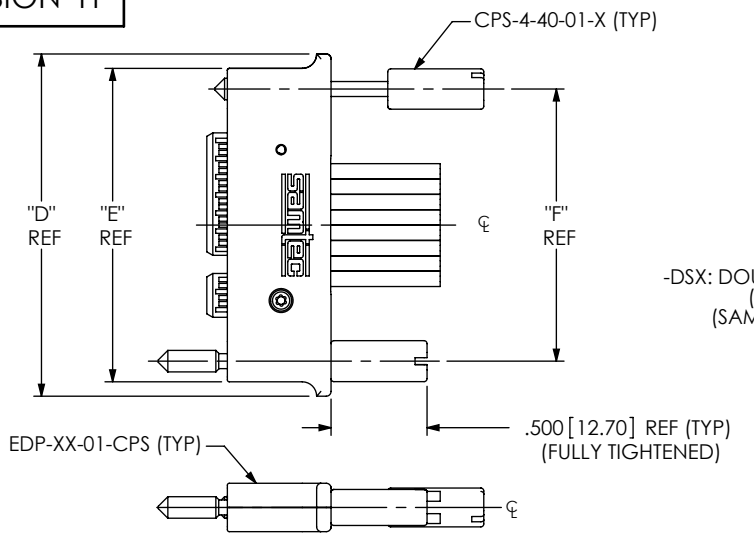

FIG. 2

-DSX: DOUBLE VERTICAL WITH CAPTIVE PANEL SCREWS
(EEDP-016-XX.XX-X-DS1-XXX SHOWN)
(SAME AS FIG. 1, UNLESS OTHERWISE STATED)

TABLE 4 (FOR USE WITH FIG. 2 & FIG. 3)					
No. OF PAIRS	"D"	"E"	"F"	EDP-XX-01-CPS	EDP-XX-01-RAS
-008	1.365 [34.67]	1.215 [30.86]	1.024 [26.00]	EDP-08-01-CPS	EDP-08-01-RAS
-016	1.782 [45.26]	1.632 [41.45]	1.417 [36.00]	EDP-16-01-CPS	EDP-16-01-RAS
-024	2.160 [54.86]	2.010 [51.05]	1.772 [45.00]	EDP-24-01-CPS	EDP-24-01-RAS
-032	2.499 [63.47]	2.349 [59.66]	2.126 [54.00]	EDP-32-01-CPS	EDP-32-01-RAS

FIG. 3

-RSX: RIGHT ANGLE WITH CAPTIVE PANEL SCREWS
(EEDP-016-XX.XX-X-RS1-XXX SHOWN)
(SAME AS FIG. 2, UNLESS OTHERWISE STATED)

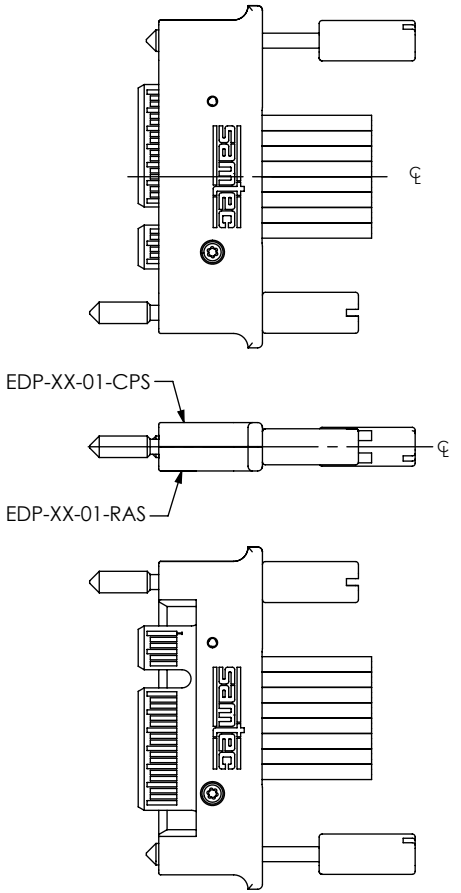

TABLE 3 (FOR -008, -016 & -032 ONLY)

FIRST END OPTION	FIRST END SUB-PCB-0453-EEDP-XXX-EC-X (SEE NOTE 7)	WIRING OPTION	FIRST END PIN #	SECOND END PIN #	(SECOND END OPTION (SUB-PCB-0453-EEDP-XXX-EC-X) (SEE NOTE 7)) -DV1	-DV2	-DS1	-DS2	-RA1	-RA2	-RS1	-RS2	*-LV1	*-LV2	*-RL1	*-RL2
-DV1	-XXX-EC-S	1	1	1	N/A	-XXX-EC-C	N/A	-XXX-EC-C	N/A	-XXX-EC-C	N/A	-XXX-EC-C	N/A	-XXX-EC-C	N/A	-XXX-EC-C
		2	1	2	N/A	-XXX-EC-S	N/A	-XXX-EC-S	N/A	-XXX-EC-S	N/A	-XXX-EC-S	N/A	-XXX-EC-S	N/A	-XXX-EC-S
		3	1	N-1	-XXX-EC-S	N/A	-XXX-EC-S	N/A	-XXX-EC-S	N/A	-XXX-EC-S	N/A	-XXX-EC-S	N/A	-XXX-EC-S	N/A
		4	1	N	-XXX-EC-C	N/A	-XXX-EC-C	N/A	-XXX-EC-C	N/A	-XXX-EC-C	N/A	-XXX-EC-C	N/A	-XXX-EC-C	N/A
-DV2	-XXX-EC-S	1	1	1	-XXX-EC-C	N/A	-XXX-EC-C	N/A	-XXX-EC-C	N/A	-XXX-EC-C	N/A	-XXX-EC-C	N/A	-XXX-EC-C	N/A
		2	1	2	-XXX-EC-S	N/A	-XXX-EC-S	N/A	-XXX-EC-S	N/A	-XXX-EC-S	N/A	-XXX-EC-S	N/A	-XXX-EC-S	N/A
		3	1	N-1	N/A	-XXX-EC-S	N/A	-XXX-EC-S	N/A	-XXX-EC-S	N/A	-XXX-EC-S	N/A	-XXX-EC-S	N/A	-XXX-EC-S
		4	1	N	N/A	-XXX-EC-C	N/A	-XXX-EC-C	N/A	-XXX-EC-C	N/A	-XXX-EC-C	N/A	-XXX-EC-C	N/A	-XXX-EC-C
-DS1	-XXX-EC-S	1	1	1	N/A	-XXX-EC-C	N/A	-XXX-EC-C	N/A	-XXX-EC-C	N/A	-XXX-EC-C	N/A	-XXX-EC-C	N/A	-XXX-EC-C
		2	1	2	N/A	-XXX-EC-S	N/A	-XXX-EC-S	N/A	-XXX-EC-S	N/A	-XXX-EC-S	N/A	-XXX-EC-S	N/A	-XXX-EC-S
		3	1	N-1	-XXX-EC-S	N/A	-XXX-EC-S	N/A	-XXX-EC-S	N/A	-XXX-EC-S	N/A	-XXX-EC-S	N/A	-XXX-EC-S	N/A
		4	1	N	-XXX-EC-C	N/A	-XXX-EC-C	N/A	-XXX-EC-C	N/A	-XXX-EC-C	N/A	-XXX-EC-C	N/A	-XXX-EC-C	N/A
-DS2	-XXX-EC-S	1	1	1	-XXX-EC-C	N/A	-XXX-EC-C	N/A	-XXX-EC-C	N/A	-XXX-EC-C	N/A	-XXX-EC-C	N/A	-XXX-EC-C	N/A
		2	1	2	-XXX-EC-S	N/A	-XXX-EC-S	N/A	-XXX-EC-S	N/A	-XXX-EC-S	N/A	-XXX-EC-S	N/A	-XXX-EC-S	N/A
		3	1	N-1	N/A	-XXX-EC-S	N/A	-XXX-EC-S	N/A	-XXX-EC-S	N/A	-XXX-EC-S	N/A	-XXX-EC-S	N/A	-XXX-EC-S
		4	1	N	N/A	-XXX-EC-C	N/A	-XXX-EC-C	N/A	-XXX-EC-C	N/A	-XXX-EC-C	N/A	-XXX-EC-C	N/A	-XXX-EC-C
-RA1	-XXX-EC-S	1	1	1	N/A	-XXX-EC-C	N/A	-XXX-EC-C	N/A	-XXX-EC-C	N/A	-XXX-EC-C	N/A	-XXX-EC-C	N/A	-XXX-EC-C
		2	1	2	N/A	-XXX-EC-S	N/A	-XXX-EC-S	N/A	-XXX-EC-S	N/A	-XXX-EC-S	N/A	-XXX-EC-S	N/A	-XXX-EC-S
		3	1	N-1	-XXX-EC-S	N/A	-XXX-EC-S	N/A	-XXX-EC-S	N/A	-XXX-EC-S	N/A	-XXX-EC-S	N/A	-XXX-EC-S	N/A
		4	1	N	-XXX-EC-C	N/A	-XXX-EC-C	N/A	-XXX-EC-C	N/A	-XXX-EC-C	N/A	-XXX-EC-C	N/A	-XXX-EC-C	N/A
-RA2	-XXX-EC-S	1	1	1	-XXX-EC-C	N/A	-XXX-EC-C	N/A	-XXX-EC-C	N/A	-XXX-EC-C	N/A	-XXX-EC-C	N/A	-XXX-EC-C	N/A
		2	1	2	-XXX-EC-S	N/A	-XXX-EC-S	N/A	-XXX-EC-S	N/A	-XXX-EC-S	N/A	-XXX-EC-S	N/A	-XXX-EC-S	N/A
		3	1	N-1	N/A	-XXX-EC-S	N/A	-XXX-EC-S	N/A	-XXX-EC-S	N/A	-XXX-EC-S	N/A	-XXX-EC-S	N/A	-XXX-EC-S
		4	1	N	N/A	-XXX-EC-C	N/A	-XXX-EC-C	N/A	-XXX-EC-C	N/A	-XXX-EC-C	N/A	-XXX-EC-C	N/A	-XXX-EC-C
-RS1	-XXX-EC-S	1	1	1	N/A	-XXX-EC-C	N/A	-XXX-EC-C	N/A	-XXX-EC-C	N/A	-XXX-EC-C	N/A	-XXX-EC-C	N/A	-XXX-EC-C
		2	1	2	N/A	-XXX-EC-S	N/A	-XXX-EC-S	N/A	-XXX-EC-S	N/A	-XXX-EC-S	N/A	-XXX-EC-S	N/A	-XXX-EC-S
		3	1	N-1	-XXX-EC-S	N/A	-XXX-EC-S	N/A	-XXX-EC-S	N/A	-XXX-EC-S	N/A	-XXX-EC-S	N/A	-XXX-EC-S	N/A
		4	1	N	-XXX-EC-C	N/A	-XXX-EC-C	N/A	-XXX-EC-C	N/A	-XXX-EC-C	N/A	-XXX-EC-C	N/A	-XXX-EC-C	N/A
-RS2	-XXX-EC-S	1	1	1	-XXX-EC-C	N/A	-XXX-EC-C	N/A	-XXX-EC-C	N/A	-XXX-EC-C	N/A	-XXX-EC-C	N/A	-XXX-EC-C	N/A
		2	1	2	-XXX-EC-S	N/A	-XXX-EC-S	N/A	-XXX-EC-S	N/A	-XXX-EC-S	N/A	-XXX-EC-S	N/A	-XXX-EC-S	N/A
		3	1	N-1	N/A	-XXX-EC-S	N/A	-XXX-EC-S	N/A	-XXX-EC-S	N/A	-XXX-EC-S	N/A	-XXX-EC-S	N/A	-XXX-EC-S
		4	1	N	N/A	-XXX-EC-C	N/A	-XXX-EC-C	N/A	-XXX-EC-C	N/A	-XXX-EC-C	N/A	-XXX-EC-C	N/A	-XXX-EC-C
-LV1	-XXX-EC-S	1	1	1	N/A	-XXX-EC-C	N/A	-XXX-EC-C	N/A	-XXX-EC-C	N/A	-XXX-EC-C	N/A	-XXX-EC-C	N/A	-XXX-EC-C
		2	1	2	N/A	-XXX-EC-S	N/A	-XXX-EC-S	N/A	-XXX-EC-S	N/A	-XXX-EC-S	N/A	-XXX-EC-S	N/A	-XXX-EC-S
		3	1	N-1	-XXX-EC-S	N/A	-XXX-EC-S	N/A	-XXX-EC-S	N/A	-XXX-EC-S	N/A	-XXX-EC-S	N/A	-XXX-EC-S	N/A
		4	1	N	-XXX-EC-C	N/A	-XXX-EC-C	N/A	-XXX-EC-C	N/A	-XXX-EC-C	N/A	-XXX-EC-C	N/A	-XXX-EC-C	N/A
-LV2	-XXX-EC-S	1	1	1	-XXX-EC-C	N/A	-XXX-EC-C	N/A	-XXX-EC-C	N/A	-XXX-EC-C	N/A	-XXX-EC-C	N/A	-XXX-EC-C	N/A
		2	1	2	-XXX-EC-S	N/A	-XXX-EC-S	N/A	-XXX-EC-S	N/A	-XXX-EC-S	N/A	-XXX-EC-S	N/A	-XXX-EC-S	N/A
		3	1	N-1	N/A	-XXX-EC-S	N/A	-XXX-EC-S	N/A	-XXX-EC-S	N/A	-XXX-EC-S	N/A	-XXX-EC-S	N/A	-XXX-EC-S
		4	1	N	N/A	-XXX-EC-C	N/A	-XXX-EC-C	N/A	-XXX-EC-C	N/A	-XXX-EC-C	N/A	-XXX-EC-C	N/A	-XXX-EC-C
-RL1	-XXX-EC-S	1	1	1	N/A	-XXX-EC-C	N/A	-XXX-EC-C	N/A	-XXX-EC-C	N/A	-XXX-EC-C	N/A	-XXX-EC-C	N/A	-XXX-EC-C
		2	1	2	N/A	-XXX-EC-S	N/A	-XXX-EC-S	N/A	-XXX-EC-S	N/A	-XXX-EC-S	N/A	-XXX-EC-S	N/A	-XXX-EC-S
		3	1	N-1	-XXX-EC-S	N/A	-XXX-EC-S	N/A	-XXX-EC-S	N/A	-XXX-EC-S	N/A	-XXX-EC-S	N/A	-XXX-EC-S	N/A
		4	1	N	-XXX-EC-C	N/A	-XXX-EC-C	N/A	-XXX-EC-C	N/A	-XXX-EC-C	N/A	-XXX-EC-C	N/A	-XXX-EC-C	N/A
-RL2	-XXX-EC-S	1	1	1	-XXX-EC-C	N/A	-XXX-EC-C	N/A	-XXX-EC-C	N/A	-XXX-EC-C	N/A	-XXX-EC-C	N/A	-XXX-EC-C	N/A
		2	1	2	-XXX-EC-S	N/A	-XXX-EC-S	N/A	-XXX-EC-S	N/A	-XXX-EC-S	N/A	-XXX-EC-S	N/A	-XXX-EC-S	N/A
		3	1	N-1	N/A	-XXX-EC-S	N/A	-XXX-EC-S	N/A	-XXX-EC-S	N/A	-XXX-EC-S	N/A	-XXX-EC-S	N/A	-XXX-EC-S
		4	1	N	N/A	-XXX-EC-C	N/A	-XXX-EC-C	N/A	-XXX-EC-C	N/A	-XXX-EC-C	N/A	-XXX-EC-C	N/A	-XXX-EC-C

F:\DWG\MISC\mktg\EEDP-XXX-XX.XX-XXX-XXX-X-MKT.SLDDRW

PROPRIETARY NOTE
THIS DOCUMENT CONTAINS INFORMATION CONFIDENTIAL AND PROPRIETARY TO SAMTEC, INC. AND SHALL NOT BE REPRODUCED OR TRANSFERRED TO OTHER DOCUMENTS OR DISCLOSED TO OTHERS OR USED FOR ANY PURPOSE OTHER THAN THAT WHICH IT WAS OBTAINED WITHOUT THE EXPRESSED WRITTEN CONSENT OF SAMTEC, INC.

DO NOT SCALE DRAWING

SHEET SCALE: 1:1

SAMTEC
520 PARK EAST BLVD, NEW ALBANY, IN 47150
* PHONE: 812.944.6733 FAX: 812.948.5047
e-Mail: INFO@SAMTEC.COM CODE: 55322

DESCRIPTION:
TWIN-AX EDGE CARD CABLE ASSEMBLY

DWG. NO.
EEDP-XXX-XX.XX-XXX-XXX-X

BY: BRATCHER 09/25/2003 | SHEET 4 OF 8

REVISION H

FIG. 4

-024 PAIRS
EEDP-024-XX.XX-2-DV1-RA2 SHOWN
(SAME AS FIG. 1, UNLESS OTHERWISE STATED)

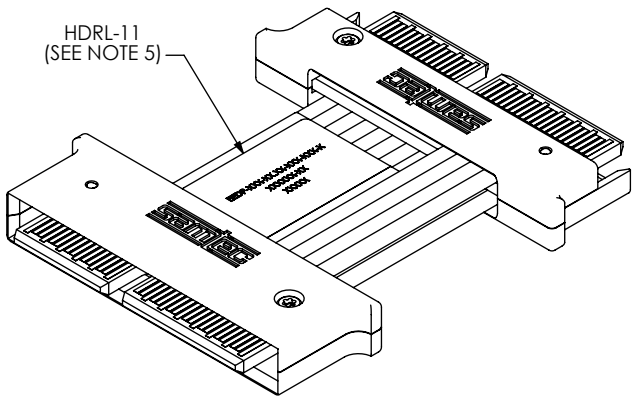

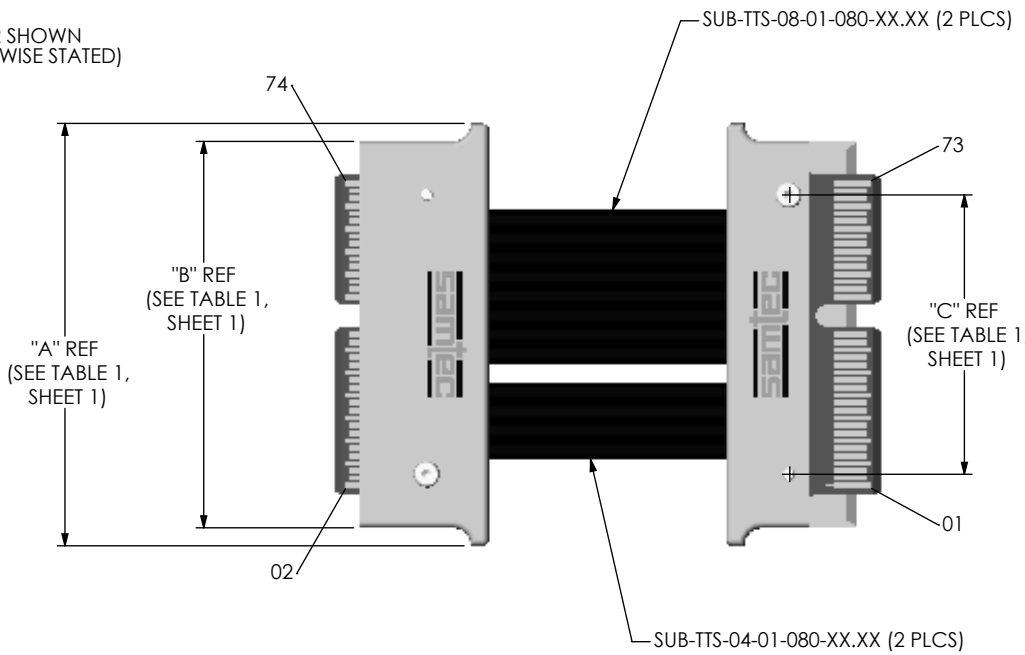

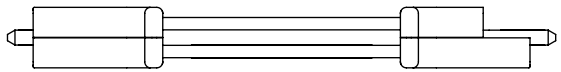

TABLE 5 (FOR -24 ONLY)

FIRST END OPTION	FIRST END SUB-PCB-0453-EEDP-XXX-EC-X (SEE NOTE 7)	WIRING OPTION	FIRST END PIN #	SECOND END PIN #	SECOND END OPTION (SUB-PCB-0453-EEDP-XXX-EC-X) (SEE NOTE 7) -DV1	-DV2	-DS1	-DS2	-RA1	-RA2	-RS1	-RS2	*-LV1	*-LV2	*-RL1	*-RL2
-DV1	-XXX-EC-S	1	1	1	N/A	-XXX-EC-C	N/A	-XXX-EC-C	N/A	-XXX-EC-C	N/A	-XXX-EC-C	N/A	-XXX-EC-C	N/A	-XXX-EC-C
		2	1	2	N/A	-XXX-EC-S	N/A	-XXX-EC-S	N/A	-XXX-EC-S	N/A	-XXX-EC-S	N/A	-XXX-EC-S	N/A	-XXX-EC-S
		3	1	N-1	N/A	N/A	N/A	N/A	N/A	N/A	N/A	N/A	N/A	N/A	N/A	N/A
		4	1	N	N/A	N/A	N/A	N/A	N/A	N/A	N/A	N/A	N/A	N/A	N/A	N/A
-DV2	-XXX-EC-S	1	1	1	-XXX-EC-C	N/A	-XXX-EC-C	N/A	-XXX-EC-C	N/A	-XXX-EC-C	N/A	-XXX-EC-C	N/A	-XXX-EC-C	N/A
		2	1	2	-XXX-EC-S	N/A	-XXX-EC-S	N/A	-XXX-EC-S	N/A	-XXX-EC-S	N/A	-XXX-EC-S	N/A	-XXX-EC-S	N/A
		3	1	N-1	N/A	N/A	N/A	N/A	N/A	N/A	N/A	N/A	N/A	N/A	N/A	N/A
		4	1	N	N/A	N/A	N/A	N/A	N/A	N/A	N/A	N/A	N/A	N/A	N/A	N/A
-DS1	-XXX-EC-S	1	1	1	N/A	-XXX-EC-C	N/A	-XXX-EC-C	N/A	-XXX-EC-C	N/A	-XXX-EC-C	N/A	-XXX-EC-C	N/A	-XXX-EC-C
		2	1	2	N/A	-XXX-EC-S	N/A	-XXX-EC-S	N/A	-XXX-EC-S	N/A	-XXX-EC-S	N/A	-XXX-EC-S	N/A	-XXX-EC-S
		3	1	N-1	N/A	N/A	N/A	N/A	N/A	N/A	N/A	N/A	N/A	N/A	N/A	N/A
		4	1	N	N/A	N/A	N/A	N/A	N/A	N/A	N/A	N/A	N/A	N/A	N/A	N/A
-DS2	-XXX-EC-S	1	1	1	-XXX-EC-C	N/A	-XXX-EC-C	N/A	-XXX-EC-C	N/A	-XXX-EC-C	N/A	-XXX-EC-C	N/A	-XXX-EC-C	N/A
		2	1	2	-XXX-EC-S	N/A	-XXX-EC-S	N/A	-XXX-EC-S	N/A	-XXX-EC-S	N/A	-XXX-EC-S	N/A	-XXX-EC-S	N/A
		3	1	N-1	N/A	N/A	N/A	N/A	N/A	N/A	N/A	N/A	N/A	N/A	N/A	N/A
		4	1	N	N/A	N/A	N/A	N/A	N/A	N/A	N/A	N/A	N/A	N/A	N/A	N/A
-RA1	-XXX-EC-S	1	1	1	N/A	-XXX-EC-C	N/A	-XXX-EC-C	N/A	-XXX-EC-C	N/A	-XXX-EC-C	N/A	-XXX-EC-C	N/A	-XXX-EC-C
		2	1	2	N/A	-XXX-EC-S	N/A	-XXX-EC-S	N/A	-XXX-EC-S	N/A	-XXX-EC-S	N/A	-XXX-EC-S	N/A	-XXX-EC-S
		3	1	N-1	N/A	N/A	N/A	N/A	N/A	N/A	N/A	N/A	N/A	N/A	N/A	N/A
		4	1	N	N/A	N/A	N/A	N/A	N/A	N/A	N/A	N/A	N/A	N/A	N/A	N/A
-RA2	-XXX-EC-S	1	1	1	-XXX-EC-C	N/A	-XXX-EC-C	N/A	-XXX-EC-C	N/A	-XXX-EC-C	N/A	-XXX-EC-C	N/A	-XXX-EC-C	N/A
		2	1	2	-XXX-EC-S	N/A	-XXX-EC-S	N/A	-XXX-EC-S	N/A	-XXX-EC-S	N/A	-XXX-EC-S	N/A	-XXX-EC-S	N/A
		3	1	N-1	N/A	N/A	N/A	N/A	N/A	N/A	N/A	N/A	N/A	N/A	N/A	N/A
		4	1	N	N/A	N/A	N/A	N/A	N/A	N/A	N/A	N/A	N/A	N/A	N/A	N/A
-RS1	-XXX-EC-S	1	1	1	N/A	-XXX-EC-C	N/A	-XXX-EC-C	N/A	-XXX-EC-C	N/A	-XXX-EC-C	N/A	-XXX-EC-C	N/A	-XXX-EC-C
		2	1	2	N/A	-XXX-EC-S	N/A	-XXX-EC-S	N/A	-XXX-EC-S	N/A	-XXX-EC-S	N/A	-XXX-EC-S	N/A	-XXX-EC-S
		3	1	N-1	N/A	N/A	N/A	N/A	N/A	N/A	N/A	N/A	N/A	N/A	N/A	N/A
		4	1	N	N/A	N/A	N/A	N/A	N/A	N/A	N/A	N/A	N/A	N/A	N/A	N/A
-RS2	-XXX-EC-S	1	1	1	-XXX-EC-C	N/A	-XXX-EC-C	N/A	-XXX-EC-C	N/A	-XXX-EC-C	N/A	-XXX-EC-C	N/A	-XXX-EC-C	N/A
		2	1	2	-XXX-EC-S	N/A	-XXX-EC-S	N/A	-XXX-EC-S	N/A	-XXX-EC-S	N/A	-XXX-EC-S	N/A	-XXX-EC-S	N/A
		3	1	N-1	N/A	N/A	N/A	N/A	N/A	N/A	N/A	N/A	N/A	N/A	N/A	N/A
		4	1	N	N/A	N/A	N/A	N/A	N/A	N/A	N/A	N/A	N/A	N/A	N/A	N/A
-LV1	-XXX-EC-S	1	1	1	N/A	-XXX-EC-C	N/A	-XXX-EC-C	N/A	-XXX-EC-C	N/A	-XXX-EC-C	N/A	-XXX-EC-C	N/A	-XXX-EC-C
		2	1	2	N/A	-XXX-EC-S	N/A	-XXX-EC-S	N/A	-XXX-EC-S	N/A	-XXX-EC-S	N/A	-XXX-EC-S	N/A	-XXX-EC-S
		3	1	N-1	N/A	N/A	N/A	N/A	N/A	N/A	N/A	N/A	N/A	N/A	N/A	N/A
		4	1	N	N/A	N/A	N/A	N/A	N/A	N/A	N/A	N/A	N/A	N/A	N/A	N/A
-LV2	-XXX-EC-S	1	1	1	-XXX-EC-C	N/A	-XXX-EC-C	N/A	-XXX-EC-C	N/A	-XXX-EC-C	N/A	-XXX-EC-C	N/A	-XXX-EC-C	N/A
		2	1	2	-XXX-EC-S	N/A	-XXX-EC-S	N/A	-XXX-EC-S	N/A	-XXX-EC-S	N/A	-XXX-EC-S	N/A	-XXX-EC-S	N/A
		3	1	N-1	N/A	N/A	N/A	N/A	N/A	N/A	N/A	N/A	N/A	N/A	N/A	N/A
		4	1	N	N/A	N/A	N/A	N/A	N/A	N/A	N/A	N/A	N/A	N/A	N/A	N/A
-RL1	-XXX-EC-S	1	1	1	N/A	-XXX-EC-C	N/A	-XXX-EC-C	N/A	-XXX-EC-C	N/A	-XXX-EC-C	N/A	-XXX-EC-C	N/A	-XXX-EC-C
		2	1	2	N/A	-XXX-EC-S	N/A	-XXX-EC-S	N/A	-XXX-EC-S	N/A	-XXX-EC-S	N/A	-XXX-EC-S	N/A	-XXX-EC-S
		3	1	N-1	N/A	N/A	N/A	N/A	N/A	N/A	N/A	N/A	N/A	N/A	N/A	N/A
		4	1	N	N/A	N/A	N/A	N/A	N/A	N/A	N/A	N/A	N/A	N/A	N/A	N/A
-RL2	-XXX-EC-S	1	1	1	-XXX-EC-C	N/A	-XXX-EC-C	N/A	-XXX-EC-C	N/A	-XXX-EC-C	N/A	-XXX-EC-C	N/A	-XXX-EC-C	N/A
		2	1	2	-XXX-EC-S	N/A	-XXX-EC-S	N/A	-XXX-EC-S	N/A	-XXX-EC-S	N/A	-XXX-EC-S	N/A	-XXX-EC-S	N/A
		3	1	N-1	N/A	N/A	N/A	N/A	N/A	N/A	N/A	N/A	N/A	N/A	N/A	N/A
		4	1	N	N/A	N/A	N/A	N/A	N/A	N/A	N/A	N/A	N/A	N/A	N/A	N/A

F:\DWG\MISC\mktg\EEDP-XXX-XX.XX-XXX-XXX-X-MKT.SLDDRW

PROPRIETARY NOTE

THIS DOCUMENT CONTAINS INFORMATION CONFIDENTIAL AND PROPRIETARY TO SAMTEC, INC. AND SHALL NOT BE REPRODUCED OR TRANSFERRED TO OTHER DOCUMENTS OR DISCLOSED TO OTHERS OR USED FOR ANY PURPOSE OTHER THAN THAT WHICH IT WAS OBTAINED WITHOUT THE EXPRESSED WRITTEN CONSENT OF SAMTEC, INC.

DO NOT SCALE DRAWING

SHEET SCALE: 1.25:1

SAMTEC
520 PARK EAST BLVD, NEW ALBANY, IN 47150
* PHONE: 812.944.6733 FAX: 812.948.5047
e-Mail: INFO@SAMTEC.COM CODE: 55322

DESCRIPTION:
TWIN-AX EDGE CARD CABLE ASSEMBLY

DWG. NO.
EEDP-XXX-XX.XX-XXX-XXX-X

BY: BRATCHER 09/25/2003 | SHEET 5 OF 8

REVISION H

FIG. 5
-LVX: DOUBLE VERTICAL WITH LATCHES
(EEDP-016-XX.XX-X-LV1-XXX SHOWN)
(SAME AS FIG. 1, UNLESS OTHERWISE STATED)

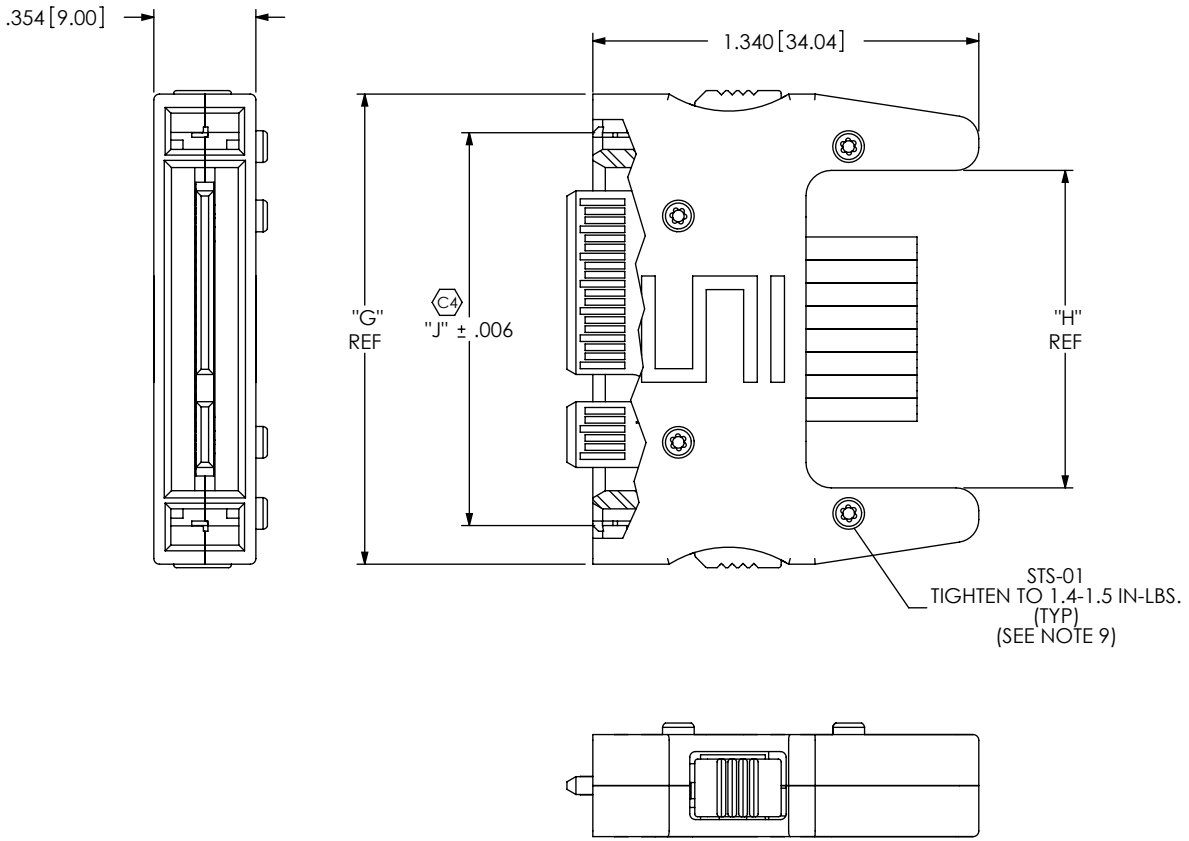

TABLE 6					
No. OF PAIRS	"G"	"H"	"J"	LEDP-XX-01-T	LEDP-XX-01-B
-008	1.254 [31.85]	.724 [18.40]	.982 [24.94]	LEDP-08-01-T	LEDP-08-01-B
-016	1.632 [41.45]	1.102 [28.00]	1.360 [34.54]	LEDP-16-01-T	LEDP-16-01-B
-024	2.010 [51.05]	1.480 [37.60]	1.738 [44.15]	LEDP-24-01-T	LEDP-24-01-B
-032	2.388 [60.65]	1.858 [47.20]	2.116 [53.75]	LEDP-32-01-T	LEDP-32-01-B

IN-PROCESS 1
ADD LTCB-XX TO LTC-03-X

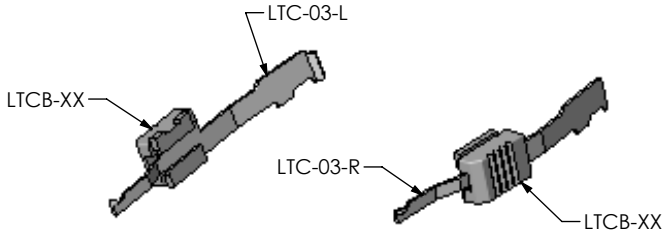

IN-PROCESS 2

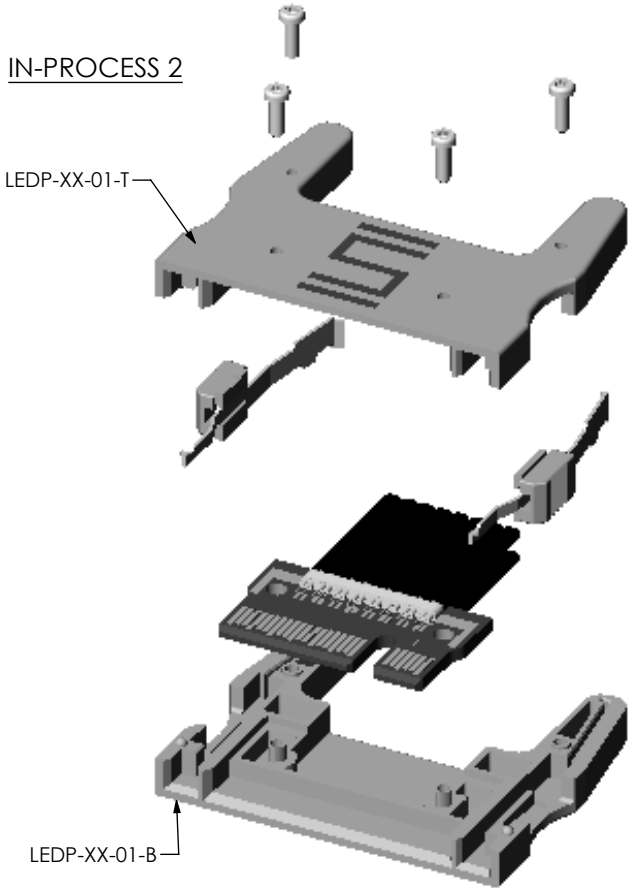

PROPRIETARY NOTE

THIS DOCUMENT CONTAINS INFORMATION CONFIDENTIAL AND PROPRIETARY TO SAMTEC, INC. AND SHALL NOT BE REPRODUCED OR TRANSFERRED TO OTHER DOCUMENTS OR DISCLOSED TO OTHERS OR USED FOR ANY PURPOSE OTHER THAN THAT WHICH IT WAS OBTAINED WITHOUT THE EXPRESSED WRITTEN CONSENT OF SAMTEC, INC.

DO NOT SCALE DRAWING

SHEET SCALE: 1.25:1

SAMTEC
520 PARK EAST BLVD, NEW ALBANY, IN 47150
* PHONE: 812.944.6733 FAX: 812.948.5047
e-Mail: INFO@SAMTEC.COM CODE: 55322

DESCRIPTION:
TWIN-AX EDGE CARD CABLE ASSEMBLY

DWG. NO.
EEDP-XXX-XX.XX-XXX-XXX-X

BY: BRATCHER 09/25/2003 | SHEET 6 OF 8

F:\DWG\MISC\mktg\EEDP-XXX-XX.XX-XXX-XXX-X-MKT.SLDDRW

REVISION H

H

TABLE 7

No OF PAIRS	POSITIONS
-008	1 3 5 7 9 11 [KEY (SEE NOTE 8)] 13 15 17 19 21 23 25
	G S S G S S [KEY (SEE NOTE 8)] G S S G S S G
	G S S G S S [KEY (SEE NOTE 8)] G S S G S S G
	2 4 6 8 10 12 [KEY (SEE NOTE 8)] 14 16 18 20 22 24 26
-016	1 3 5 7 9 11 [KEY (SEE NOTE 8)] 13 15 17 19 21 23 25 27 29 31 33 35 37 39 41 43 45 47 49
	G S S G S S [KEY (SEE NOTE 8)] G S S G S S G S S G S S G S S G S S G
	G S S G S S [KEY (SEE NOTE 8)] G S S G S S G S S G S S G S S G S S G
	2 4 6 8 10 12 [KEY (SEE NOTE 8)] 14 16 18 20 22 24 26 28 30 32 34 36 38 40 42 44 46 48 50
-024	1 3 5 7 9 11 13 15 17 19 21 23 25 27 29 31 33 35 37 39 41 [KEY (SEE NOTE 8)] 43 45 47 49 51 53 55 57 59 61 63 65 67 69 71 73
	G S S G S S G S S G S S G S S G S S G S S [KEY (SEE NOTE 8)] G S S G S S G S S G S S G S S G
	G S S G S S G S S G S S G S S G S S G S S [KEY (SEE NOTE 8)] G S S G S S G S S G S S G S S G
	2 4 6 8 10 12 14 16 18 20 22 24 26 28 30 32 34 36 38 40 42 [KEY (SEE NOTE 8)] 44 46 48 50 52 54 56 58 60 62 64 66 68 70 72 74
-032	1 3 5 7 9 11 13 15 17 19 21 23 25 27 29 31 33 35 37 39 41 43 45 47 49 51 53 [KEY (SEE NOTE 8)] 55 57 59 61 63 65 67 69 71 73 75 77 79 81 83 85 87 89 91 93 95 97
	G S S G S S G S S G S S G S S G S S G S S G S S G S S G S S [KEY (SEE NOTE 8)] G S S G S S G S S G S S G S S G S S G S S G S S G
	G S S G S S G S S G S S G S S G S S G S S G S S G S S G S S [KEY (SEE NOTE 8)] G S S G S S G S S G S S G S S G S S G S S G S S G
	2 4 6 8 10 12 14 16 18 20 22 24 26 28 30 32 34 36 38 40 42 44 46 48 50 52 54 [KEY (SEE NOTE 8)] 56 58 60 62 64 66 68 70 72 74 76 78 80 82 84 86 88 90 92 94 96 98

TABLE 8

No. OF PAIRS	No OF POSITIONS PER ROW (CONNECTOR)
-008	13
-016	25
-024	37
-032	49

TABLE 9

END OPTION	MATING CONNECTOR
-DVX, -DSX	HSEC8-1XX-01-S-DV-X or HSEC8-1XX-01-S-D-EM2
-RXX	MEC8-1XX-02-L-D-RA1
-LVX	HSEC8-1XX-01-S-DV-X-L or HSEC8-1XX-01-S-D-EM2L

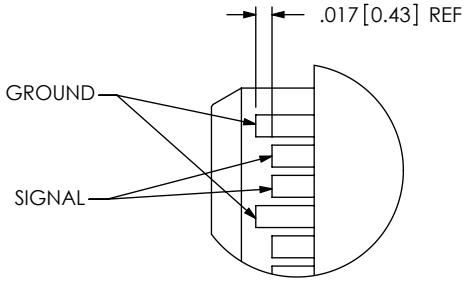

DETAIL 'B'
SCALE 5 : 1
(SEE TABLE 6)

PROPRIETARY NOTE
THIS DOCUMENT CONTAINS INFORMATION CONFIDENTIAL AND PROPRIETARY TO SAMTEC, INC. AND SHALL NOT BE REPRODUCED OR TRANSFERRED TO OTHER DOCUMENTS OR DISCLOSED TO OTHERS OR USED FOR ANY PURPOSE OTHER THAN THAT WHICH IT WAS OBTAINED WITHOUT THE EXPRESSED WRITTEN CONSENT OF SAMTEC, INC.

DO NOT SCALE DRAWING

SHEET SCALE: 1.25:1

F:\DWG\MISC\mktg\EEDP-XXX-XX.XX-XXX-XXX-X-MKT.SLDDRW

SAMTEC
520 PARK EAST BLVD, NEW ALBANY, IN 47150
* PHONE: 812.944.6733 FAX: 812.948.5047
e-Mail: INFO@SAMTEC.COM CODE: 55322

DESCRIPTION:
TWIN-AX EDGE CARD CABLE ASSEMBLY

DWG. NO.
EEDP-XXX-XX.XX-XXX-XXX-X

BY: BRATCHER 09/25/2003

REVISION H

FIG. 6
-RLX: DOUBLE VERTICAL WITH LATCHES
(EEDP-016-XX.XX-X-RL1-XXX SHOWN)
(SAME AS FIG. 1, UNLESS OTHERWISE STATED)

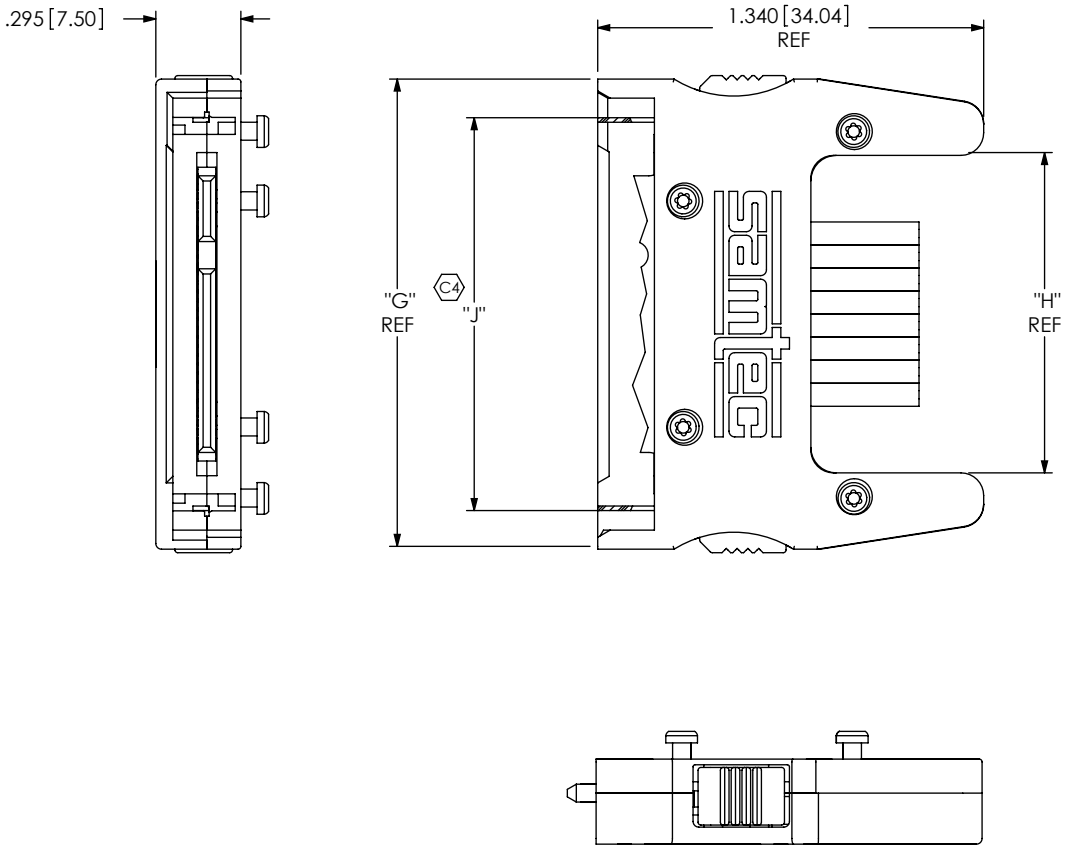

IN-PROCESS 1
ADD LTCB-01 TO LTC-03-X

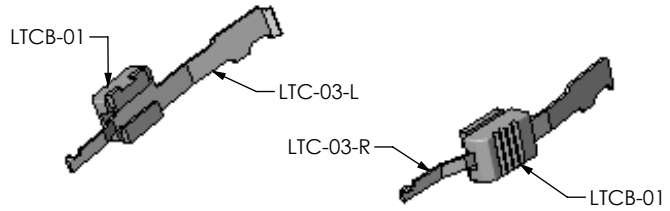

IN-PROCESS 2

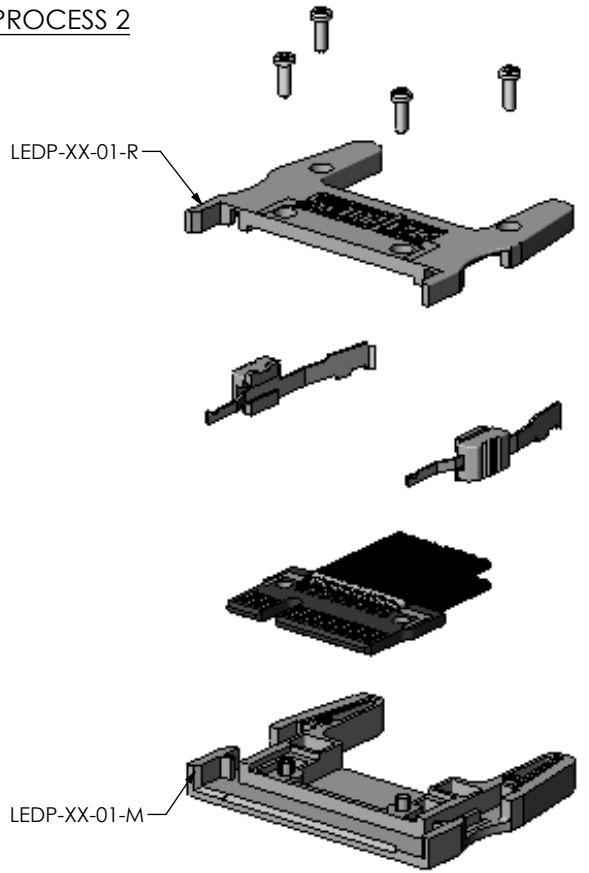

TABLE 7

No. OF PAIRS	"G"	"H"	"J"	LEDP-XX-01-R	LEDP-XX-01-M
-008	1.254 [31.85]	.724 [18.40]	.986 [25.05]	LEDP-08-01-R	LEDP-08-01-M
-016	1.632 [41.45]	1.102 [28.00]	1.364 [34.65]	LEDP-16-01-R	LEDP-16-01-M
-024	2.010 [51.05]	1.480 [37.60]	1.742 [44.25]	LEDP-24-01-R	LEDP-24-01-M
-032	2.388 [60.65]	1.858 [47.20]	2.120 [53.85]	LEDP-32-01-R	LEDP-32-01-M

PROPRIETARY NOTE

THIS DOCUMENT CONTAINS INFORMATION CONFIDENTIAL AND PROPRIETARY TO SAMTEC, INC. AND SHALL NOT BE REPRODUCED OR TRANSFERRED TO OTHER DOCUMENTS OR DISCLOSED TO OTHERS OR USED FOR ANY PURPOSE OTHER THAN THAT WHICH IT WAS OBTAINED WITHOUT THE EXPRESSED WRITTEN CONSENT OF SAMTEC, INC.

DO NOT SCALE DRAWING

SHEET SCALE: 1.25:1

SAMTEC
520 Park East Blvd. New Albany, IN 47151
Phone (812) 944-6733 Fax (812) 948-5047
e-Mail: INFO@SAMTEC.COM CODE: 55322

DESCRIPTION:
TWIN-AX EDGE CARD CABLE ASSEMBLY

DWG. NO.
EEDP-XXX-XX.XX-XXX-XXX-X

BY: BRATCHER 09/25/2003

F:\DWG\MISC\mktg\EEDP-XXX-XX.XX-XXX-XXX-X-MKT.SLDDRW