PART No. CWST1024NK

for more information visit

www.hammfg.com

Data subject to change without notice

Isometric drawing Not to Scale

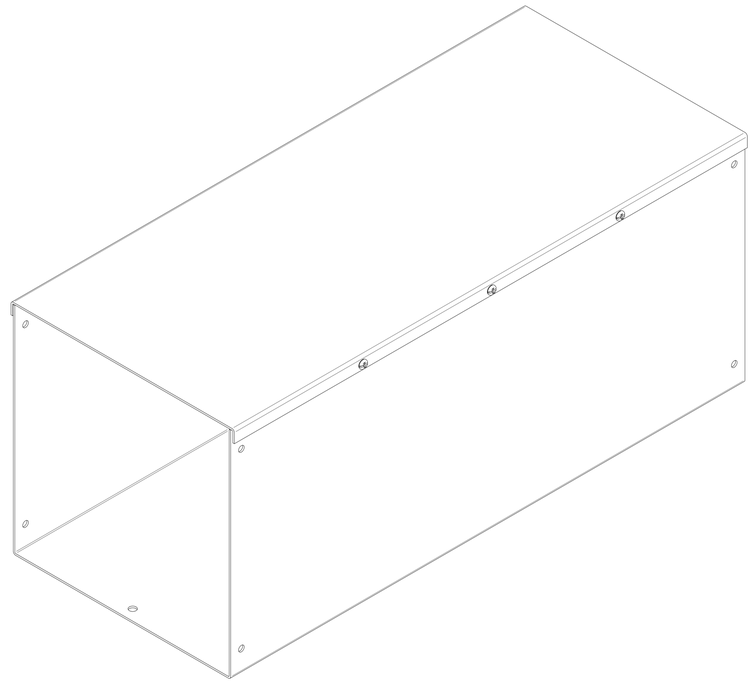

ISOMETRIC VIEW

TOP VIEW

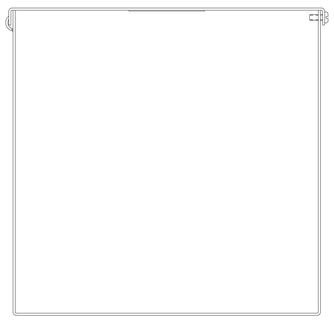

SIDE VIEW

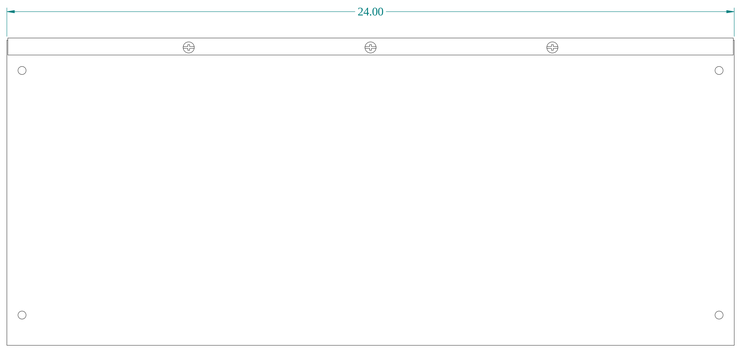

FRONT VIEW

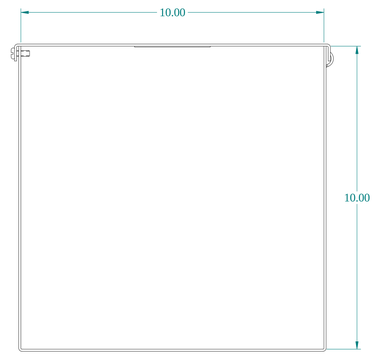

SIDE VIEW

BACK VIEW

BOTTOM VIEW