PART No. FLK24T8

for more information visit

www.hammondmfg.com

Data subject to change without notice

Isometric drawing Not to Scale

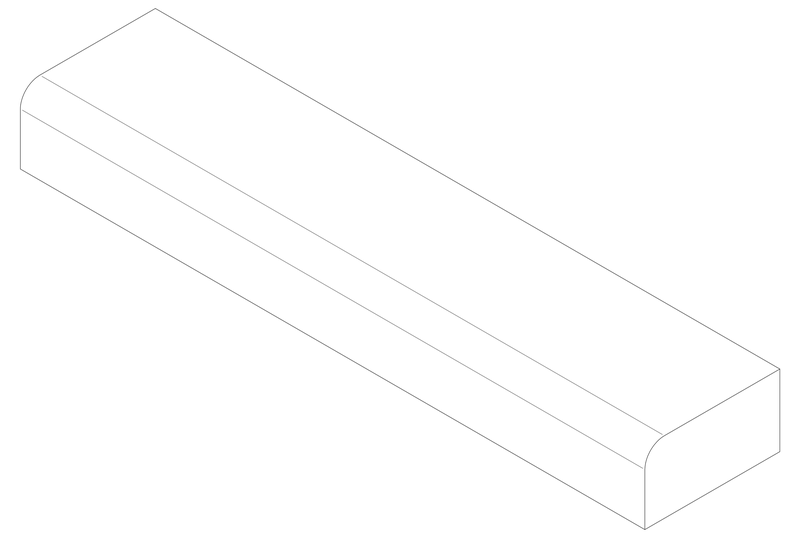

ISOMETRIC VIEW

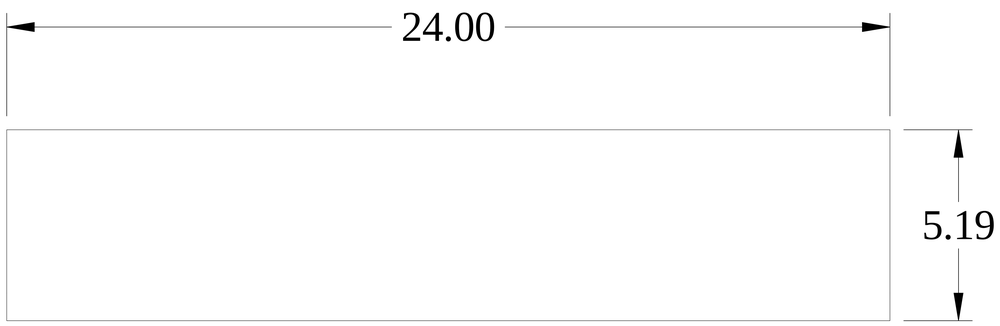

TOP VIEW

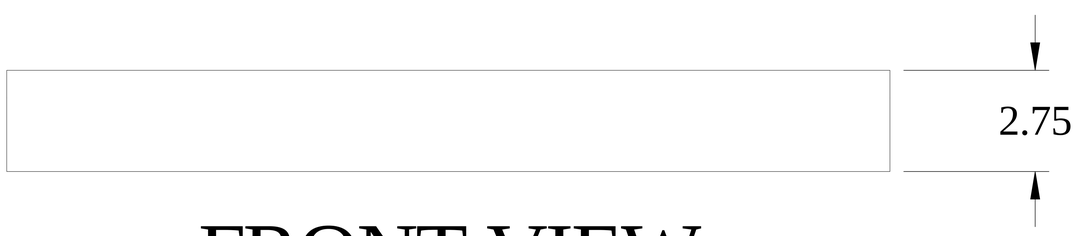

FRONT VIEW

SIDE VIEW

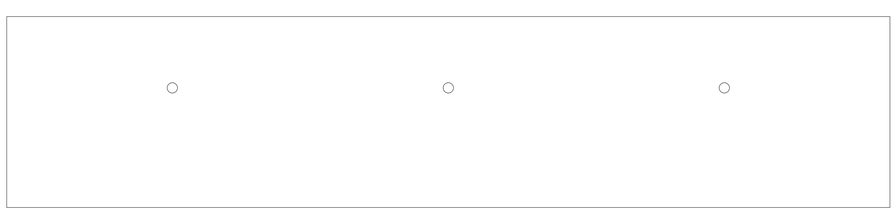

BOTTOM VIEW