REVISION A

**DESIGNED & DIMENSIONED IN MILLIMETERS[INCHES]**

# SS4-XX-X.XX-X-D-K-X-TR A

No OF POSITIONS
-10, -15, -20, -30, -40, **-50
(PER ROW)

BODY HEIGHT
-3.00: SEE FIG. 1
(USE C-229-3.00-L)
*-3.50: SEE FIG. 2, SHEET 2
(USE C-229-3.50-L)
* = NOT TOOLED
**= NOT RELEASED FOR PRODUCTION

PACKAGING
-TR: TAPE AND REEL PACKAGING
(SEE NOTE 4)

OPTIONS
**-L: LATCHING
(USE WT-40-X.XX-T)
(SEE NOTE 3)
(LEAVE BLANK FOR NO OPTION)

PLACEMENT PAD
-K: KAPTON PAD
(USE K-500-300)
(SEE FIG. 4, SHEET 3)

ROW SPECIFICATION
-D: DOUBLE

PLATING
-L: LIGHT SELECTIVE GOLD
(USE C-229-X.XX-L)

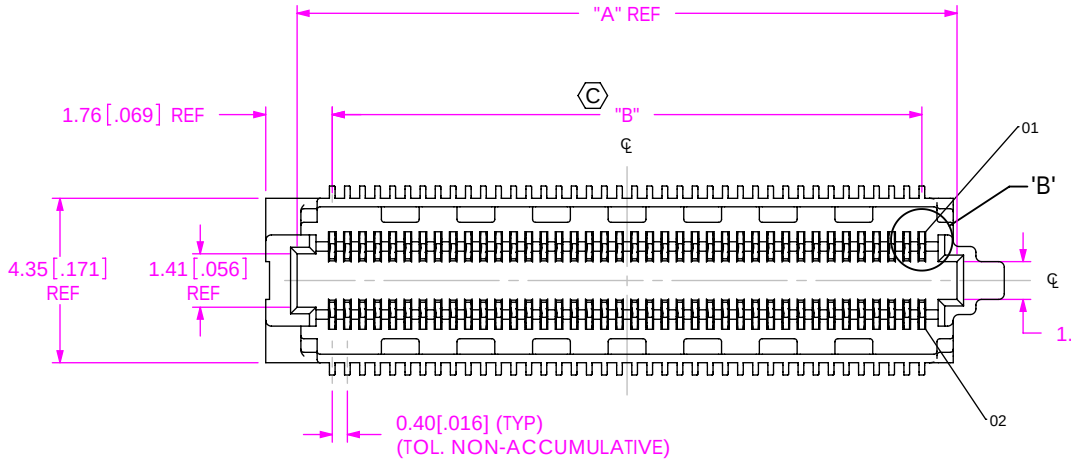


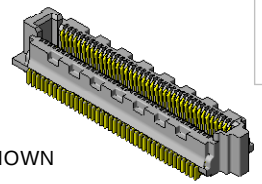

FIG. 1
SS4-40-3.00-L-D SHOWN

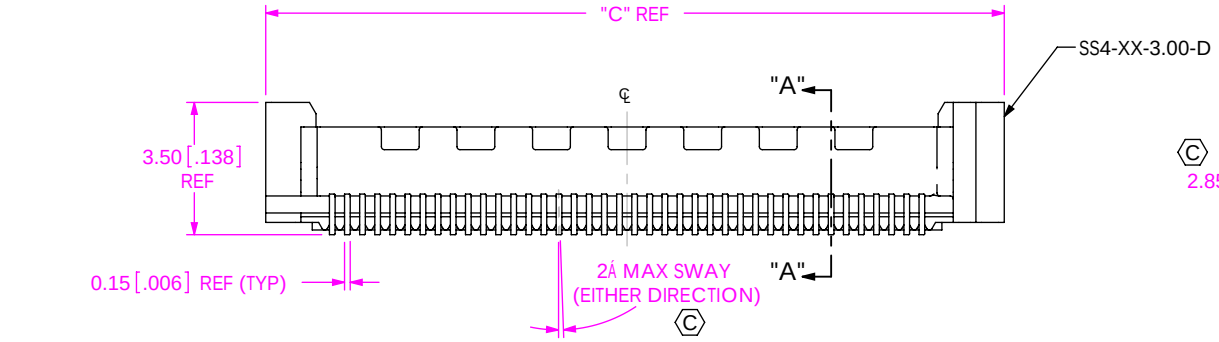


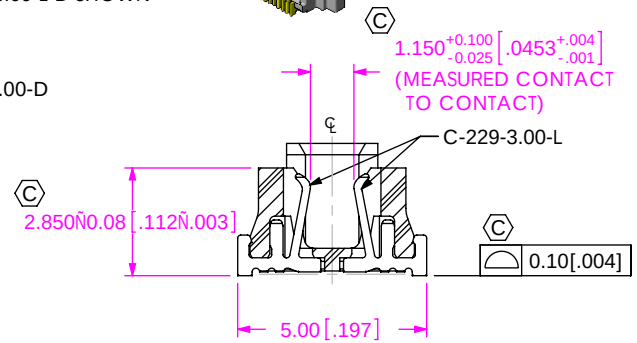


SECTION "A"-"A"
SCALE 5 : 1

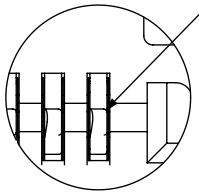


DETAIL 'B'
SCALE 15 : 1

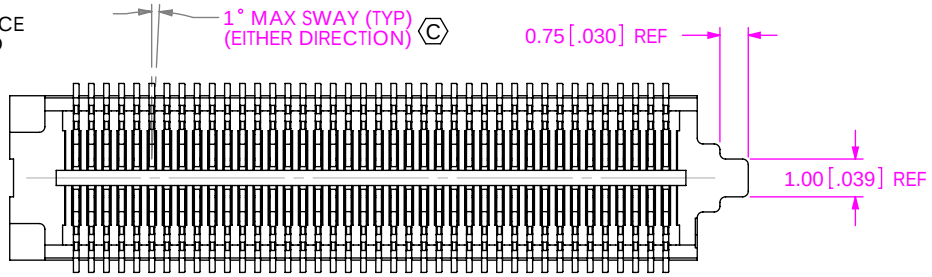


| TABLE 2 (REF) | | | |
|---|---|---|---|
| STACK HEIGHT | | | |
| SS4 LEAD STYLE | ST4 LEAD STYLE | | |
| | -1.00 | *-1.50 | *-2.50 |
| -3.00 | 4.0MM | 4.5MM | 5.5MM |
| *-3.50 | 4.5MM | 5.0MM | 6.0MM |

* = NOT TOOLED

| TABLE 1 | | | |
|---|---|---|---|
| POS | "A" | "B" | "C" |
| -10 | 5.46 [.215] | 3.60 [.142] | 7.54 [.297] |
| -15 | 7.46 [.294] | 5.60 [.220] | 9.54 [.376] |
| -20 | 9.46 [.372] | 7.60 [.299] | 11.54 [.454] |
| -30 | 13.46 [.530] | 11.60 [.457] | 15.54 [.612] |
| -40 | 17.46 [.687] | 15.60 [.615] | 19.54 [.769] |
| **-50 | 21.46 [.844] | 19.60 [.772] | 23.54 [.927] |

**= NOT RELEASED FOR PRODUCTION

NOTES:

1. Ⓒ REPRESENTS A CRITICAL DIMENSION.
2. MINIMUM PUSHOUT FORCE: 2.22N[.5 LB].
3. -L: LATCHING OPTION NOT INTENDED FOR ALIGNMENT TO PCB. AUTOMATED PLACEMENT IS RECOMMENDED.
4. FOR QUANTITIES UP TO 49 PIECES, NO LEADER, TRAILER, OR REEL WILL BE SUPPLIED. FOR QUANTITIES OF 50-124 PIECES, NO LEADER OR TRAILER WILL BE SUPPLIED.

UNLESS OTHERWISE SPECIFIED, DIMENSIONS ARE IN MILLIMETERS.
TOLERANCES ARE:
DECIMALS
.X: ±0.3 [.01]
.XX: ±0.13 [.005]
.XXX: ±0.051 [.0020]
ANGLES
2 °

PROPRIETARY NOTE
THIS DOCUMENT CONTAINS INFORMATION CONFIDENTIAL AND PROPRIETARY TO SAMTEC, INC. AND SHALL NOT BE REPRODUCED OR TRANSFERRED TO OTHER DOCUMENTS OR DISCLOSED TO OTHERS OR USED FOR ANY PURPOSE OTHER THAN THAT WHICH IT WAS OBTAINED WITHOUT THE EXPRESSED WRITTEN CONSENT OF SAMTEC, INC.

520 PARK EAST BLVD, NEW ALBANY, IN 47150
PHONE: 812-944-6733 FAX: 812-948-5047
e-Mail: info@SAMTEC.com code: 55322

MATERIAL:
INSULATOR: LCP, COLOR: BLACK
CONTACT: PHOS BRONZE
LATCH: PHOS BRONZE

DO NOT SCALE DRAWING
SHEET SCALE: 2:1

DESCRIPTION:
0.4mm[.016] SOCKET STRIP ASSEMBLY

DWG. NO.
SS4-XX-X.XX-X-D-K-X-TR

BY: CLAY W 4/19/2007 SHEET 1 OF 3

c:\enterprisevault\DWG\MISC\MKTG\SS4-XX-X.XX-X-D-K-X-TR-MKT.SLDDRW

REVISION A

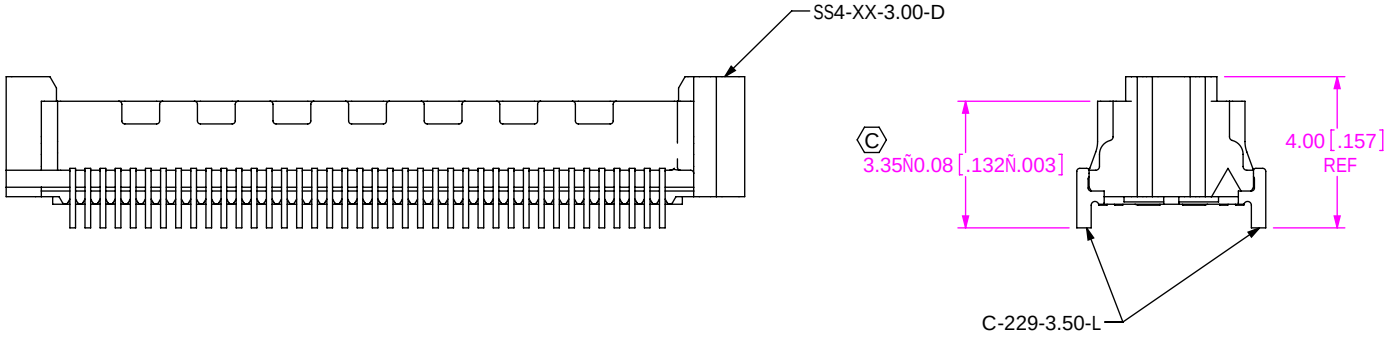


FIG. 2
SS4-40-3.50-L-D SHOWN
(SAME AS FIG. 1, UNLESS OTHERWISE STATED)
(NOT TOOLED)

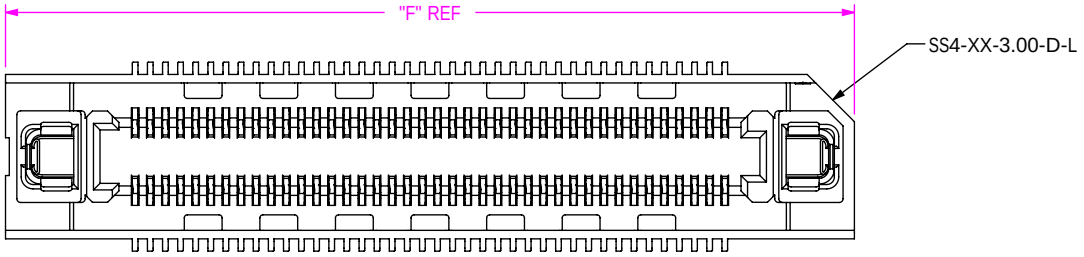


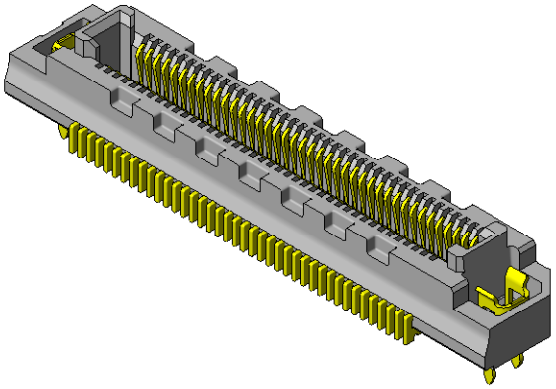

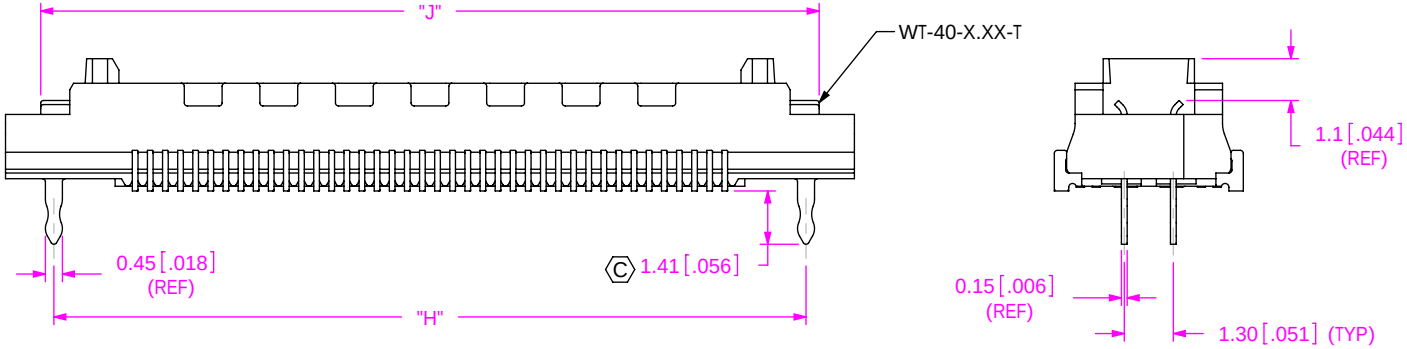


FIG. 3
SS4-40-3.00-L-D-L SHOWN
(SAME AS FIG. 1, UNLESS OTHERWISE STATED)
(NOT RELEASED FOR PRODUCTION)

**TABLE 5**

| No. OF POS | "F" | "H" | "J" |
|---|---|---|---|
| -10 | 10.46 [0.412] | 7.90 [0.311] | 8.60 [0.339] |
| -15 | 12.46 [0.491] | 9.90 [0.390] | 10.60 [0.417] |
| -20 | 14.46 [0.569] | 11.90 [0.469] | 12.60 [0.496] |
| -30 | 18.46 [0.727] | 15.90 [0.626] | 16.60 [0.654] |
| -40 | 22.46 [0.884] | 19.90 [0.783] | 20.60 [0.811] |
| **-50 | 26.46 [1.042] | 23.90 [0.941] | 24.60 [0.969] |

**= NOT RELEASED FOR PRODUCTION

**TABLE 6**

| BODY HEIGHT | LATCH |
|---|---|
| -3.00 | WT-40-3.00-T |
| *-3.50 | WT-40-3.50-T |

*=NOT TOOLED

PROPRIETARY NOTE
THIS DOCUMENT CONTAINS INFORMATION CONFIDENTIAL AND PROPRIETARY TO SAMTEC, INC. AND SHALL NOT BE REPRODUCED OR TRANSFERRED TO OTHER DOCUMENTS OR DISCLOSED TO OTHERS OR USED FOR ANY PURPOSE OTHER THAN THAT WHICH IT WAS OBTAINED WITHOUT THE EXPRESSED WRITTEN CONSENT OF SAMTEC, INC.

DO NOT SCALE DRAWING

SHEET SCALE: 5:1

samtec
520 PARK EAST BLVD, NEW ALBANY, IN 47150
PHONE: 812-944-6733 FAX: 812-948-5047
e-Mail: info@SAMTEC.com code: 55322

DESCRIPTION:
0.4mm[.016] SOCKET STRIP ASSEMBLY

DWG. NO.
SS4-XX-X.XX-X-D-K-X-TR

BY: CLAY W 4/19/2007 SHEET 2 OF 3

c:\enterprisevault\DWG\MISC\MKTG\SS4-XX-X.XX-X-D-K-X-TR-MKT.SLDDRW

REVISION A

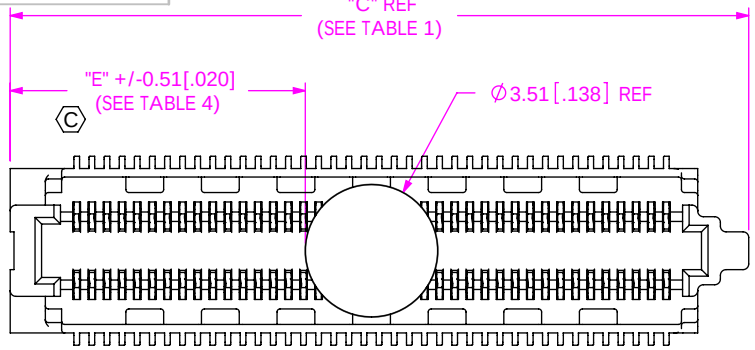


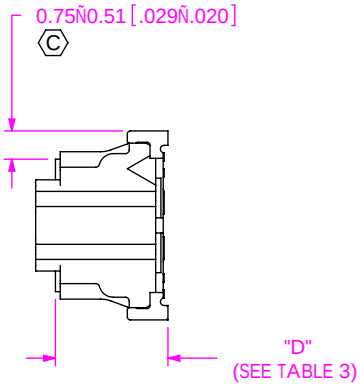


FIG. 4
SS4-40-3.00-L-D-K SHOWN
(USE K-500-300)
(SAME AS FIG. 1, UNLESS OTHERWISE STATED)

| TABLE 3 | |
|---|---|
| BODY HEIGHT | "D" |
| -3.00 | 2.98 [0.117] |
| *-3.50 | 3.48 [0.137] |

* = NOT TOOLED

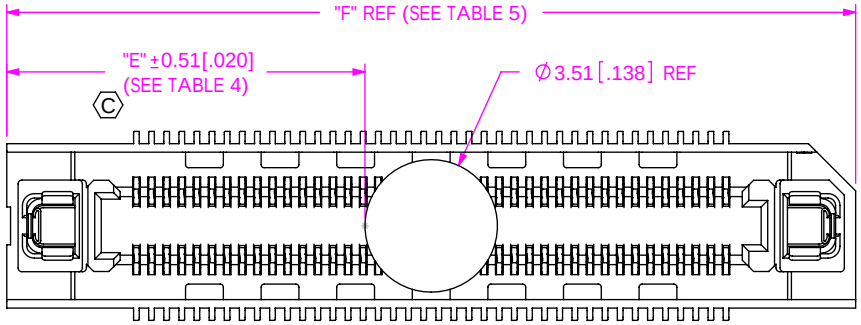


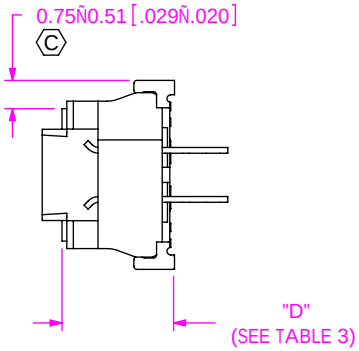


FIG. 6
SS4-40-3.00-L-D-K-L SHOWN
(USE K-500-300)
(SAME AS FIG. 1, UNLESS OTHERWISE STATED)
(NOT RELEASED FOR PRODUCTION)

| TABLE 4 | | |
|---|---|---|
| POS | "E" NO -L OPTION | "E" W/ -L OPTION |
| -10 | 1.48 [0.058] | 3.48 [0.137] |
| -15 | 2.48 [0.098] | 4.48 [0.176] |
| -20 | 3.48 [0.137] | 5.48 [0.216] |
| -30 | 5.48 [0.216] | 7.48 [0.294] |
| -40 | 7.48 [0.294] | 9.48 [0.373] |
| **-50 | 9.48 [0.373] | 11.48 [0.452] |

**= NOT RELEASED FOR PRODUCTION


PROPRIETARY NOTE
THIS DOCUMENT CONTAINS INFORMATION CONFIDENTIAL AND PROPRIETARY TO SAMTEC, INC. AND SHALL NOT BE REPRODUCED OR TRANSFERRED TO OTHER DOCUMENTS OR DISCLOSED TO OTHERS OR USED FOR ANY PURPOSE OTHER THAN THAT WHICH IT WAS OBTAINED WITHOUT THE EXPRESSED WRITTEN CONSENT OF SAMTEC, INC.


DO NOT SCALE DRAWING

SHEET SCALE: 5:1


samtec
520 PARK EAST BLVD, NEW ALBANY, IN 47150
PHONE: 812-944-6733 FAX: 812-948-5047
e-Mail: info@SAMTEC.com code: 55322


DESCRIPTION:
0.4mm[.016] SOCKET STRIP ASSEMBLY

DWG. NO.
SS4-XX-X.XX-X-D-K-X-TR

BY: CLAY W 4/19/2007 SHEET 3 OF 3

c:\enterprisevault\DWG\MISC\MKTG\SS4-XX-X.XX-X-D-K-X-TR-MKT.SLDDRW