BS,C ,202444,011	A

GEN. ST.	01	02	03	04	05	06	07	08	0D	50	60	70	80	90
INT. ST.	10 11 12 13 14 18 20 31 32 33 34 38 39 40 42 43 44 45 46 48 56 70 72 73 ~~75~~ 76 81 ~~82~~ 83 84 88													

REV.	DATE	DESCRIPTION	BY	C'K'D'
A	14-09-01	CONVERSION REVISION 02	KN	

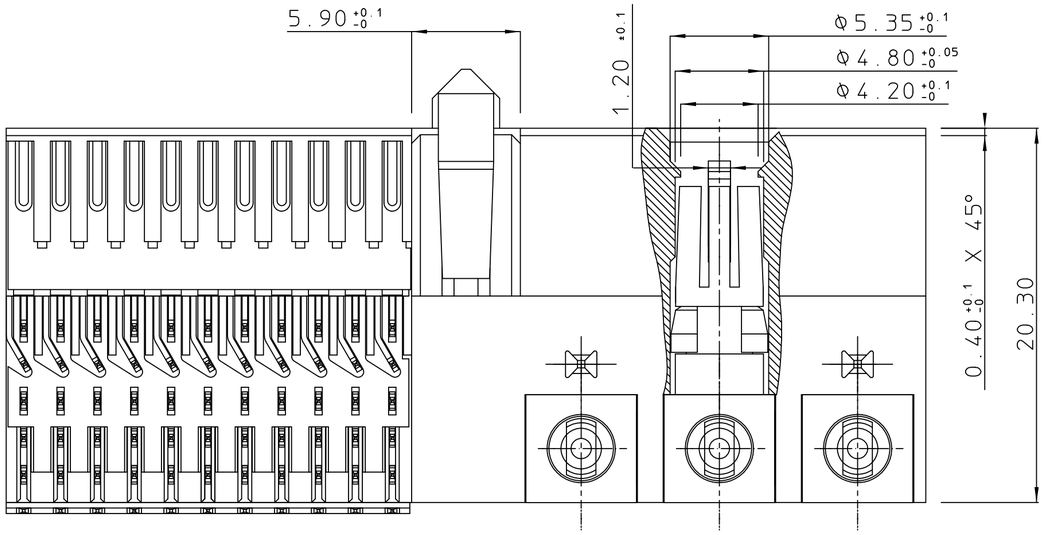

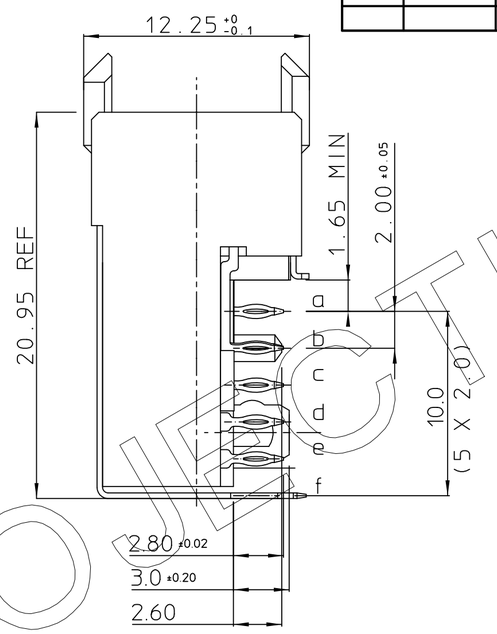

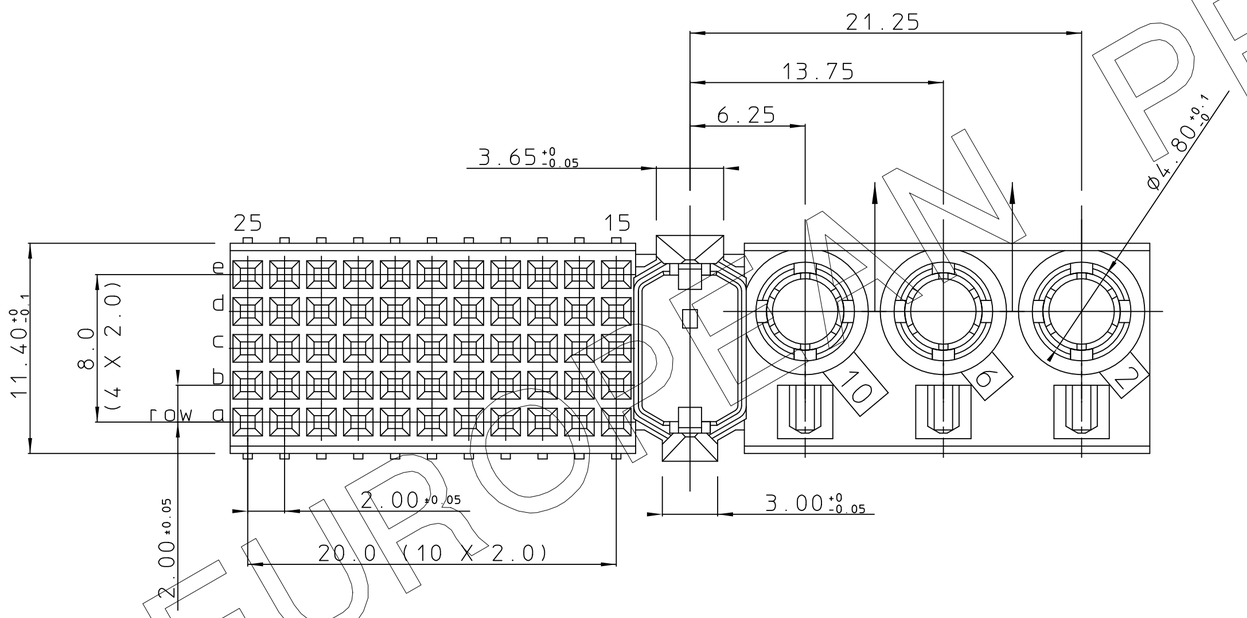

PERFORMANCE CHARACTERISTICS (SIGNAL CONTACTS)

CURRENT RATING : 1,5 A AT 20°C (FULLY LOADED)
1 A AT 70°C (FULLY LOADED)

RATED VOLTAGE : 500 V AC (CONT / CONT)

OPERATING TEMPERATURE : -55°C TO 125°C

CONTACT RESISTANCE : 20 mΩ MAX

INSERTION FORCE : 0.75 N MAX / CONT

EXTRACTION FORCE : 0.15 N MIN / CONT

INSULATION RESISTANCE : 10^4 MΩ MIN

NOTES

1. PLATING: -SIGNAL CONTACTS -> "--" PERRFORMANCE LEVEL INDICATION: (SEE CAT.NR.) | Z1 = PL3 | N9 = PL2 | E9 = PL1
   -POWER CONTACTS -> 1.5 µm Au over 2.0 µm Ni
2. THIS PRODUCT IS CSA APPROVED.
   THIS PRODUCT IS UL RECOGNIZED.
3. FOR PRE-ASSEMBLED POWER PRESS-FIT CONTACT DETAIL, SEE DRAWING NR.:
   - BS,A,201624,021
4. PCB RANGE : 1.4 - 2.7 MM MAX.
5. PCB HOLE DEFINITION:

	Ø drilled hole	Cu plating	SnPb plating	Ø finished hole
5.1	3.19 - 3.25	25 µm min.	5 µm min.	3.02 - 3.20
5.2	0.675 - 0.725	25/50 µm min.	4/10 µm min.	0.55 - 0.65

LAY-OUT
P.C.B.- HOLE

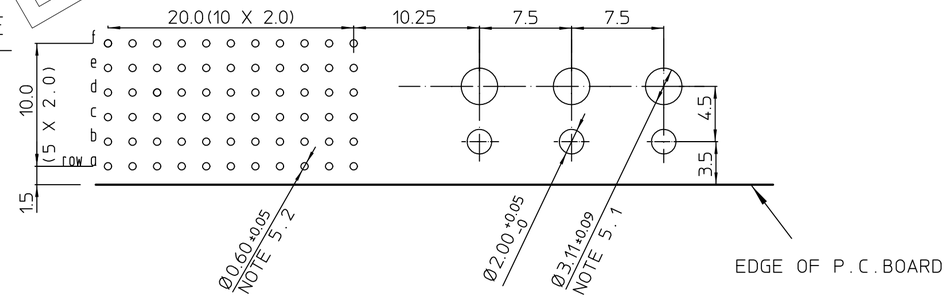

FEMALE SIGNAL RIGHT ANGLE PRESS-FIT-TO-BOARD CONNECTOR
WITH PRE-ASSEMBLED POWER PRESS-FIT CONTACTS

1DEC ±0,2 1DEC
2DEC ±0,1 2DEC
ANGLES ±1° HOEKEN

WE RESERVE THE RIGHT TO CHANGE DIMENSIONS OR REQUIREMENTS WITHOUT PRIOR NOTICE.

ALL DIMENSIONS IN MM

ALLE AFMETINGEN IN MM

APPR.	DATE	SIGN.
DRAFT	16-02-01	M.Fret
CHECKED		
PROD. MGR.		
PR.ENG.MGR.		
PR.MGT.MGR.		

REFERENCES / REFERENTIES

MPACS 5+2R RA RCP CONN TYPE M

CAT. No. HM2E33PH5001--

FCI MECHELEN N.V.
A. SPINOYSTRAAT 8, 2800 MECHELEN

SCALE 3/1

BS,C ,202444,011 — DRAWING No.

CUSTOMER DRAWING

A — REVISION

EUROPROJECTION

THIS IS OUR EXCLUSIVE PROPERTY. IT IS NOT TO BE COPIED, REPRINTED OR DISCLOSED TO A THIRD PARTY, NOR USED FOR MANUFACTURING WITHOUT OUR WRITTEN CONSENT, AND HAS TO BE RETURNED TO US IN CASE OF NO USAGE

DIT IS ONZE EIGENDOM EN MAG NOCH NAGEMAAKT, HERDRUKT, OVERGEMAAKT AAN DERDEN, NOCH VOOR FABRIKATIE GEBRUIKT WORDEN, ZONDER ONZE SCHRIFTELIJKE TOELATING. BIJ NIET GEBRUIK IS TERUGZENDING VERPLICHT.