THIS DRAWING IS UNPUBLISHED. RELEASED FOR PUBLICATION - ,- .
© COPYRIGHT - BY TYCO ELECTRONICS CORPORATION. ALL RIGHTS RESERVED.

LOC	DIST
AD	00

REVISIONS

P	LTR	DESCRIPTION	DATE	DWN	APVD
	M	REVISED PER ECO-08-000166	1/7/08	SS	MM

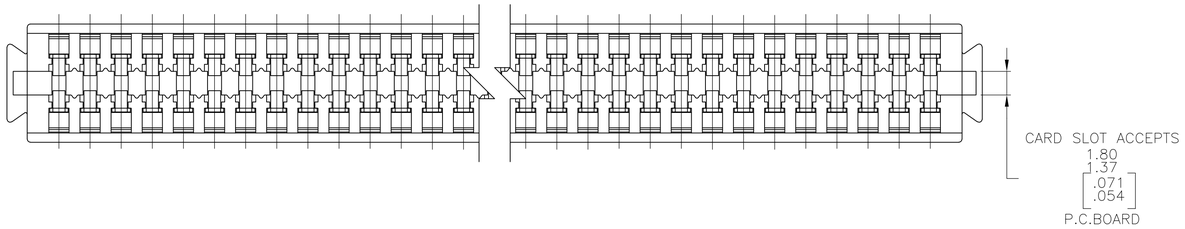

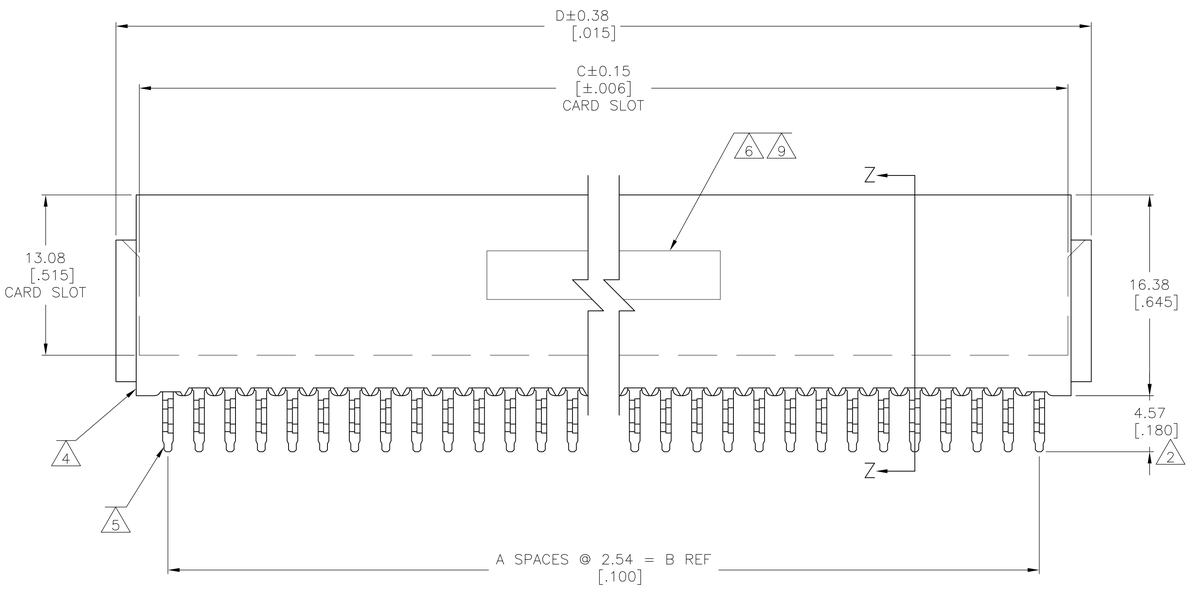

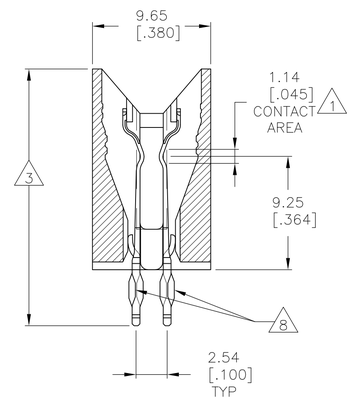

SECTION Z-Z

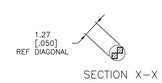

SECTION X-X

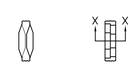

COMPLAINT SECTION

1. GOLD PLATE 0.00076 [.000030] MIN THICK OVER NICKEL UNDERPLATE PER QQ-N-290.
2. SOLDER PLATE 0.00254 [.000100] MIN THICK.
3. NICKEL PLATE PER QQ-N-290 0.00127 [.000050] MIN THICK.
4. HOUSING MATERIAL: VALOX 420-SEO. COLOR: BLACK.
5. CONTACT MATERIAL: PHOSPHOR BRONZE.
6. PART NUMBER AND DATE CODE STAMPED AS SHOWN.
7. OPTIONAL CARD GUIDE (BASE NUMBER 117169).
8. ACTION PIN REQUIRES 2.13 [.084] MIN THICK P. C. BOARD.

DRILL HOLE DIAMETER ±0.025 [±.0010]	PLATING		HOLE DIAMETER		COPPER HARDNESS KNOOP	PAD DIAMETER MIN
	COPPER	Pb Sn	AFTER PLATING	AFTER REFLOW		
1.151 [.0453]	0.03/0.08 [.001/.003]	0.008 MIN [.0003] MIN	0.94/1.09 [.037/.043]	0.91/1.09 [.036/.043]	150 MAX	1.57 [.062]
1.151 [.0453]	NOT PLATED THRU					1.65 [.065]

9. ALL PARTS ASSEMBLED IN MEXICO MUST BE HOT STAMPED "ASSY IN MEXICO" THE WORD "MEXICO" CAN BE SUBSTITUTED ONLY WHERE PART SIZE PROHIBITS STAMPING "ASSY IN MEXICO". STAMP APPROX WHERE SHOWN.

	D	C	B	A	NUMBER OF POSITIONS	PART NUMBER
	158.34 [6.234]	155.04 [6.104]	149.86 [5.900]	59	60	9-119736-6
	107.54 [4.234]	104.24 [4.104]	99.06 [3.900]	39	40	7-119736-6
	44.04 [1.734]	40.74 [1.604]	35.56 [1.400]	14	15	5-119736-1
OBSOLETE						4-119736-7
	158.34 [6.234]	155.04 [6.104]	149.86 [5.900]	59	60	4-119736-6
OBSOLETE						4-119736-5
OBSOLETE						4-119736-4
OBSOLETE						4-119736-3
OBSOLETE						4-119736-2
OBSOLETE	145.64 [5.734]	142.34 [5.604]	137.16 [5.400]	54	55	4-119736-1
OBSOLETE						4-119736-0
OBSOLETE						3-119736-9
OBSOLETE						3-119736-8
OBSOLETE						3-119736-7
OBSOLETE	132.94 [5.234]	129.64 [5.104]	124.46 [4.900]	49	50	3-119736-6
OBSOLETE						3-119736-5
OBSOLETE						3-119736-4
OBSOLETE	125.32 [4.934]	122.02 [4.804]	116.84 [4.600]	46	47	3-119736-3
OBSOLETE						3-119736-2
OBSOLETE	120.24 [4.734]	116.94 [4.604]	111.76 [4.400]	44	45	3-119736-1
OBSOLETE						3-119736-0
OBSOLETE	115.16 [4.534]	111.86 [4.404]	106.68 [4.200]	42	43	2-119736-9
OBSOLETE						2-119736-8
OBSOLETE	110.08 [4.334]	106.78 [4.204]	101.60 [4.000]	40	41	2-119736-7
	107.54 [4.234]	104.24 [4.104]	99.06 [3.900]	39	40	2-119736-6
OBSOLETE						2-119736-5
OBSOLETE						2-119736-4
OBSOLETE						2-119736-3
OBSOLETE	97.38 [3.834]	94.08 [3.704]	88.90 [3.500]	35	36	2-119736-2
OBSOLETE	94.84 [3.734]	91.54 [3.604]	83.82 [3.300]	33	34	2-119736-1
OBSOLETE						2-119736-0
OBSOLETE						1-119736-9
OBSOLETE	87.22 [3.434]	83.92 [3.304]	78.74 [3.100]	31	32	1-119736-8
OBSOLETE						1-119736-7
OBSOLETE	82.14 [3.234]	78.84 [3.104]	73.66 [2.900]	29	30	1-119736-6
OBSOLETE						1-119736-5
OBSOLETE						1-119736-4
OBSOLETE						1-119736-3
OBSOLETE						1-119736-2
OBSOLETE	69.44 [2.734]	66.14 [2.604]	60.96 [2.400]	24	25	1-119736-1
OBSOLETE	66.90 [2.634]	63.60 [2.504]	58.42 [2.300]	23	24	1-119736-0
OBSOLETE						119736-9
OBSOLETE						119736-8
OBSOLETE						119736-7
OBSOLETE	59.28 [2.334]	53.44 [2.104]	48.26 [1.900]	19	20	119736-6
OBSOLETE						119736-5
OBSOLETE						119736-4
OBSOLETE						119736-3
OBSOLETE						119736-2
	44.04 [1.734]	40.74 [1.604]	35.56 [1.400]	14	15	119736-1

THIS DRAWING IS A CONTROLLED DOCUMENT.

DIMENSIONS: mm [INCHES]

TOLERANCES UNLESS OTHERWISE SPECIFIED:
0 PLC ± -
1 PLC ± -
2 PLC ± -
3 PLC ± 0.25 [.010]
4 PLC ± -
ANGLES ± -

MATERIAL 4 - 5
FINISH SEE CALLOUTS

DWN T. SHUEY 11-14-96
CHK H. ROSE 11-22-96
APVD H. ROSE 11-22-96
PRODUCT SPEC —
APPLICATION SPEC —
WEIGHT —

Tyco Electronics
Tyco Electronics Corporation
Harrisburg, PA 17105-3608

NAME
CONNECTOR ASSEMBLY,AMP PACE,
.100 X .100 CL,WITH CARD SCOOPS
—

SIZE	CAGE CODE	DRAWING NO	RESTRICTED TO
A1	00779	C-119736	—

CUSTOMER DRAWING
SCALE 4:1 SHEET 1 OF 1 REV M