MICRO SWITCH
FREEPORT ILLINOIS, U.S.A
A DIVISION OF HONEYWELL
FED. MFG. CODE 91929

SWITCH-BASIC

CATALOG LISTING
BZ-2RL5551T

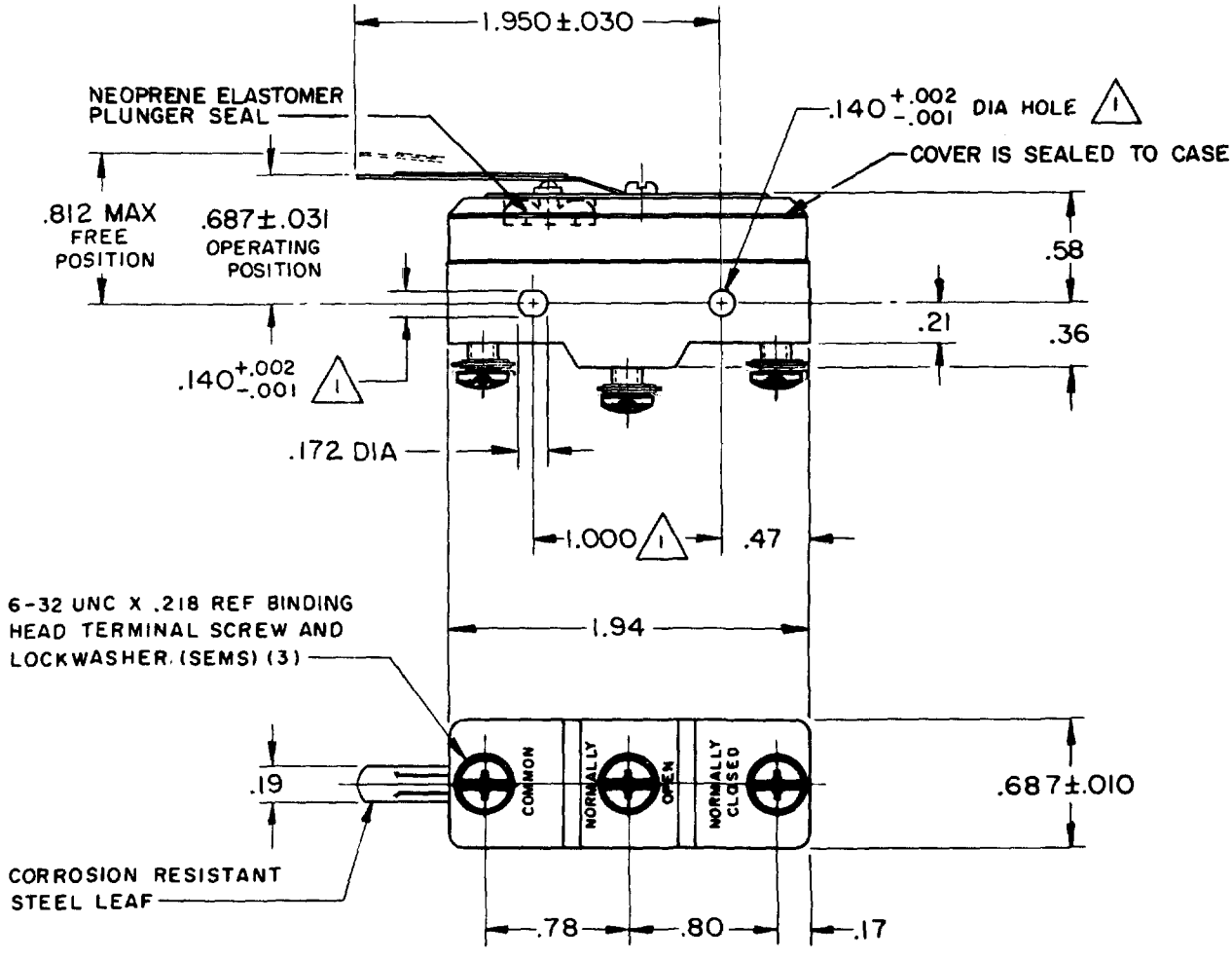

NOTES
1. MOUNTING HOLES WILL ACCEPT PINS OR SCREWS OF .139 MAX DIA ON 1.000±.002 CENTERS
2 – SEALED CONSTRUCTION PROVIDES SPLASH RESISTANCE

THIS DRAWING COVERS A PROPRIETARY ITEM AND IS THE PROPERTY OF MICRO SWITCH, A DIVISION OF HONEYWELL. THIS DRAWING IS NOT TO BE COPIED OR USED WITHOUT THE APPROVAL OF MICRO SWITCH.

THIRD ANGLE PROJECTION

CHARACTERISTICS

OPERATING FORCE———————7 OZ MAX

RELEASE FORCE———————1/2 OZ MIN

DIFFERENTIAL TRAVEL———————.050 MAX

DO NOT OVERTRAVEL MORE THAN .062

ELECTRICAL DATA

CONTACT ARRANGEMENT
S P D T

L96 15A 125, 250 OR 480 VAC
1/8 HP 125 VAC, 1/4 HP 250 VAC
1/2A 125 VDC, 1/4A 250 VDC

L288
L299
L306

16A 250V ∿ T85 5E4

SCALE FULL

DO NOT SCALE PRINT

TOLERANCES
APPLY TO DESIGN UNITS. CONVERSIONS ARE ONLY FOR REFERENCE. UNLESS NOTED, TOLERANCES ARE ±

	DIM. mm	TOL. mm/in	DIM. in	TOL. mm/in
NO PLACES	X	1/.04		
ONE PLACE	X.X	0.4/.015	X.X	0.8/.03
TWO PLACES	X.XX	0.15/.006	X.XX	0.38/.015
THREE PLACES			X.XXX	0.13/.005
ANGLES				

DESIGN UNITS SI METRIC ☐ US CUSTOMARY ■

WEIGHT

BZ-2RL5551T
PAGE 1 OF 1
RELEASE NO. CO-34271
REPLACES
DRAWING NUMBER M
ISSUE 5
CHECK

REVISIONS

A	C067209	JAP 3 MAY 90
B	CO-69351-D	JWB 18 JUL 91
C	CO-77589	JAL 30 MAR 94
D	C093346	DLT 9 SEP 98

CHECK 74 OCT 25 DRAWN K P K

FORMTEK
FO-52848-A