Major League Electronics .079 cl Board Stacker Terminal Strips - Straight

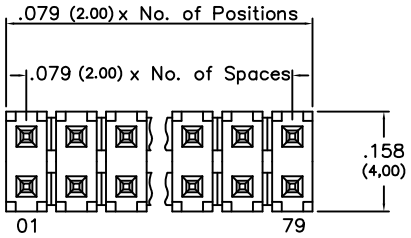

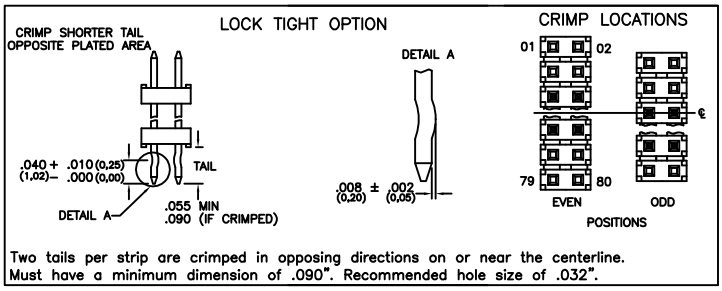

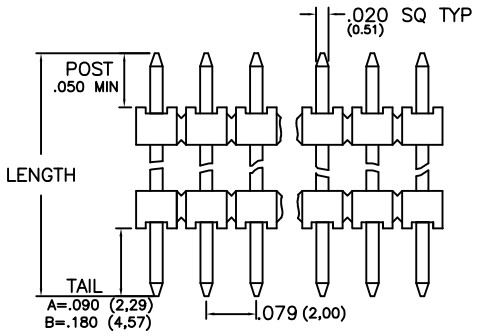

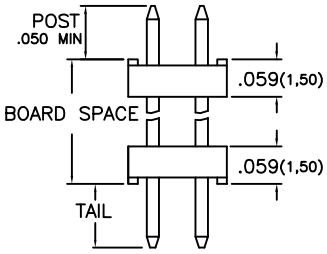

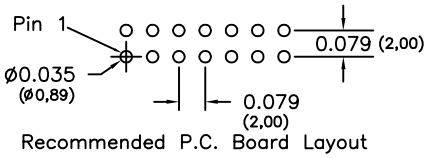

Recommended P.C. Board Layout

Tails may be clipped to achieve desired pin length

Ordering Information

BSTS-2 [XX] – [D] – [X] – [XX] – [XX] – [XXX] – [XX] – [XXX] – [LF]

- Pins Per Row: 01 - 40
- Row Specification: D = Dual Row
- Tail Length: A = .090 (2.29mm); B = .180 (4.57mm)
- Lead Free
- Polarized Position: Leave blank if not needed; If required, specify empty pin position, e.g. 012 for Pin 12
- Lock Tight "LT" Option: Leave blank if not needed; LT = With
- Desired Board Space: Please specify; e.g. .100 (2.54) = 100

Pin Options		
Length		
* .255	6.48mm	01
* .323	8.20mm	02
.377	9.58mm	03
.397	10.08mm	04
.417	10.59mm	06
.456	11.58mm	07
.555	14.10mm	08
.535	13.59mm	09
.575	14.61mm	10
.594	15.09mm	12
.614	15.60mm	14
.673	17.09mm	15
.713	18.11mm	16
.733	18.62mm	17
.752	19.10mm	18
.830	21.08mm	22
.871	22.12mm	24
.950	24.13mm	28
1.110	28.19mm	30
1.117	28.37mm	36

* N/A WITH .180 TAIL

	Plating Options
G	10µ Gold on Contact Area / Flash on Tail
T	Matte Tin All Over
GT	10µ Gold on Contact Area / Matte Tin on Tail
H	30µ Gold on Contact Area / Matte Tin on Tail
F	Gold Flash over Entire Pin

Specifications
Current Rating: 3.0 Ampere
Insulation Resistance: 1000MΩ Min.
Dielectric Withstanding: 500V AC
Contact Resistance: 20 mΩ Max.
Operating Temperature: -40°C to + 105°C
Max. Process Temperature:
- Peak: 260°C up to 10 secs.
- Process: 230°C up to 60 secs.
- Wave: 260°C up to 6 secs.
- Manual Solder: 350°C up to 5 secs.

Materials
Contact Material: Phosphor Bronze
Insulator Material: Nylon 6T
Plating: Au or Sn over 50µ" (1,27) Ni

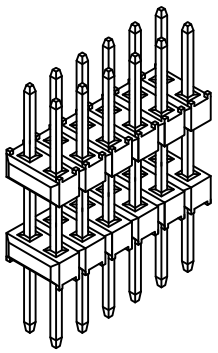

Mates with
BCSS,
BSSH,
BSSHC,
BSSQ,
BSSQC,
BSSQM,
LSMBC,
LSSHSM,
SMBC,
SSHQ,
SSHQR,
SSHR,
SSHS,
SSHSM,
ULSMBC

Products cut to specific sizes are uncancellable/nonreturnable

Parts are subject to change without notice

BSTS-2-D SERIES	.079cl Dual Row - Straight Board Stacker Terminal Strips	19 FEB 07	Scale NTS

UNLESS OTHERWISE SPECIFIED DIMENSIONS IN INCHES (MM) TOLERANCES ARE:
ONE PLACE DECIMALS ±.100
TWO PLACE DECIMALS ±.010
THREE PLACE DECIMALS ±.005
FOUR PLACE DECIMALS ±.0020
ANGLES ±5°

4235 Earnings Way, New Albany, Indiana, 47150, USA
1-800-782-3486 (USA/Canada/Mexico)
Tel: 812-944-7244
Fax: 812-944-7268
E-mail: mle@mlelectronics.com
Web: www.mlelectronics.com

Edition 1

Sheet 1/1