COPAL ELECTRONICS

F455B (□45 x 5 mm fan motor)

NEW

Low-profile Brushless DC Side Flow Fan Motor

FEATURES

- Ultra-slim model, that is ideal for imaging terminals/navigation systems/mobile PCs
- Realization of high air flow and low noise by adoption of hydrodynamic design of impeller
- Longer operating life and low-noise by sealed bearing structure
- FG signal output available to monitor change in motor condition

RoHS compliant

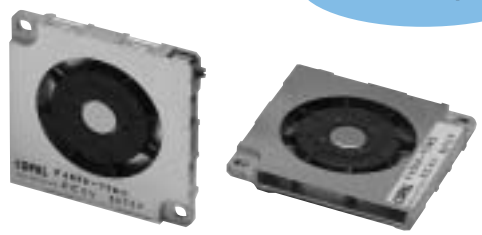

STANDARD SPECIFICATIONS

Part number	F455B-05MD
Rated voltage	5 V
Voltage range	4.5 ~ 5.5 V
Rated current	0.14 A
Rotating speed	5,000 rpm
Air flow	0.03 m³/min
Static pressure	54 Pa
Noise	23 dB(A)
Use environment	–10 ~ +60 °C (35 ~ 85 %RH)
Storage environment	–20 ~ +70 °C (35 ~ 85 %RH)
Net weight	25 g

*Figures in the table are typical values under rated operating condition.

OTHER SPECIFICATIONS

Insulation class	JIS C 4004 type (120 ° C)
Insulation resistance	Minimum 10 M ohm at DC500V between frame and terminals(+)
Dielectric strength	Maximum 1 mA of leakage under 600 V AC for 1 s between frame and terminal(+)
Withstanding restraint	After 50 hours restraining at rated voltage, no burnout and no mechanical damage
Allowable load	0.2 N maximum on metal frame or impeller
Average life (MTTF) (Definition)	Over 10,000 hours (at room temperature and room humidity) Till the point of dropping down 30% from the initial number of rotations (Under designated environment, after no load continuous running at rated voltage)
Structure	Cover : SUS304 Housing : Zinc die casting Impeller : ABS/PBT Alloy Bearing : Sleeve bearing

OUTLINE DIMENSIONS (Unit:mm)

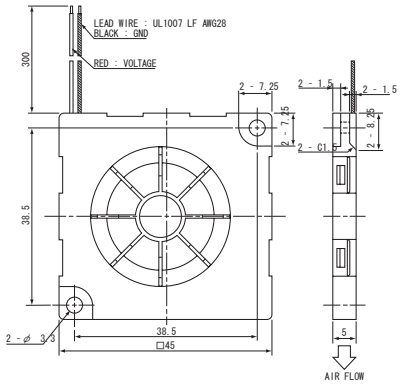

AIR FLOW PERFORMANCE CURVES

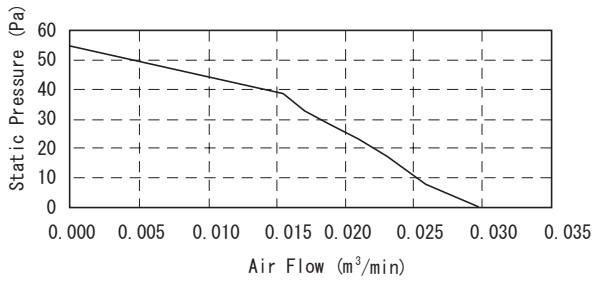

NIDEC COPAL ELECTRONICS CORP.
Nishi-shinjuku Kimuraya Bldg., 7-5-25 Nishi-shinjuku-ku, Tokyo 160-0023 JAPAN Phone : 03-3364-7055 Fax : 03-3364-7098

<SINGAPORE BRANCH>
2 Havelock Road #06-07 Apollo Centre, Singapore 059763 Phone : 6535-0056 Fax : 6535-0087

NIDEC COPAL ELECTRONICS, INC.
367 Van Ness Way, Suite 621 Torrance, CA90501, USA
Phone : 310-618-0225 Fax : 310-618-9984

NIDEC COPAL ELECTRONICS GMBH
Mergenthalerallee 79-81 65760 Eschborn, Germany
Phone : 061-96-92775-0 Fax : 061-96-92775-75

NIDEC COPAL ELECTRONICS (SHANGHAI) CO.,LTD.
E, 2/F, Zhao Feng Shi Mao Bldg., No.369, Jiang Su Rd., Shanghai, China 200050
Phone : 021-5240-0730 Fax : 021-5240-0728

NIDEC COPAL ELECTRONICS KOREA CORP.
Rm.702 Jin-il Bldg., 52-7 Banpo-Dong, Seocho-Gu, Seoul 137-040 Korea
Phone : 02-3482-5861 Fax : 02-3482-5860

URL:http://www.nidec-copal-electronics.com/

■Specifications are subject to change without notice.