REVISION Q

DO NOT SCALE FROM THIS PRINT

UNLESS OTHERWISE NOTED		
DIMENSIONS ARE IN INCHES	TOLERANCES ARE:	
ONE PLACE DECIMALS ±.1[2.5]	THREE PLACE DECIMALS ±.005 [.13]	ANGLES ±2°
TWO PLACE DECIMALS ±.01[.3]	FOUR PLACE DECIMALS ±.002 [.05]	

TITLE: .100 x .100 TERMINAL STRIP w/ MOLDED IN END SHROUDS

DWG NO: TSSH-1XX-01-XXX-XX-XX

SHEET 1 OF 2

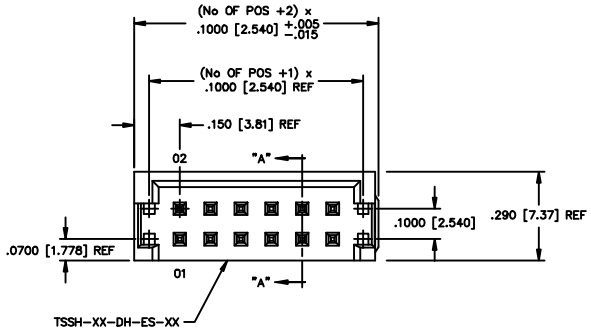

FIG. 1

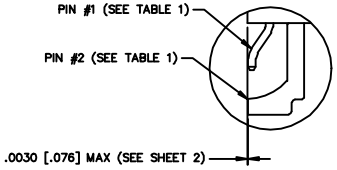

DETAIL "A"

TSSH-1XX-01-XXX-XX-XX

NO. OF POSITIONS
-02 THRU -34

LEAD STYLE
-01

Q PLATING SPEC. (SEE TABLE 1)
- -T: MATTE TIN CONTACT AND TAIL
- -S: SELECTIVE, 30 Au / 50 Ni ON CONTACT, MATTE TIN TAIL
- -L: LIGHT SELECTIVE, 10 Au / 50 Ni MIN ON CONTACT, MATTE TIN TAIL
- -F: FLASH SELECTIVE, 3 Au / 50 Ni MIN ON CONTACT, MATTE TIN TAIL
- -H: HEAVY GOLD, 30 Au / 50 Ni ON CONTACT, 3 Au / 50 Ni MIN ON TAIL
- -TL: TIN/LEAD (90/10+/-5%) CONTACT AND TAIL
- -STL: SELECTIVE, 30 Au / 50 Ni MIN ON CONTACT, TIN/LEAD (90/10+/-5%) TAIL
- -TM: MATTE TIN CONTACT AND TAIL
- -LM: LIGHT SELECTIVE, 10 Au / 50 Ni MIN ON CONTACT, MATTE TIN TAIL
- -SM: SELECTIVE, 30 Au / 50 Ni ON CONTACT, MATTE TIN TAIL
- -FM: FLASH SELECTIVE, 3 Au / 50 Ni MIN ON CONTACT, MATTE TIN TAIL

OPTION #1
- -A: ALIGNMENT PIN (SEE FIG. 2) (MOLDED)
- -TR: TAPE AND REEL
- -P: PICK AND PLACE PAD (USE PPP-18, SEE FIG. 3, 5 POS. MIN)

ROW OPTION
- -DH: DOUBLE HORIZONTAL (USE TSSH-XX-DH-ES-XX-X)

NOTES:
1. Ⓒ REPRESENTS A CRITICAL DIMENSION.
2. Ⓒ SEE SHEET 2 FOR FLUSH SPECS.
3. MAX FLASH ALLOWED: .010 [.25].
4. PUSHOUT FORCE: 1.5 LB. MINIMUM.
5. Ⓒ NO BANDOLIER MARKS ARE ALLOWED IN THE POST AREA.
6. TUBE PLUG TO BE LOCATED IN THE BODY AREA AND NOT THE TAIL AREA OF THE TUBE.
7. Q INSULATOR MATERIAL: BLACK, LCP, UL 94 VO

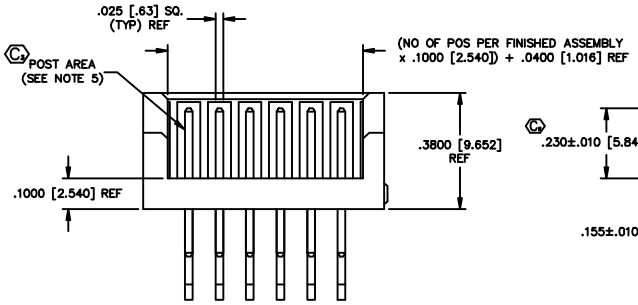

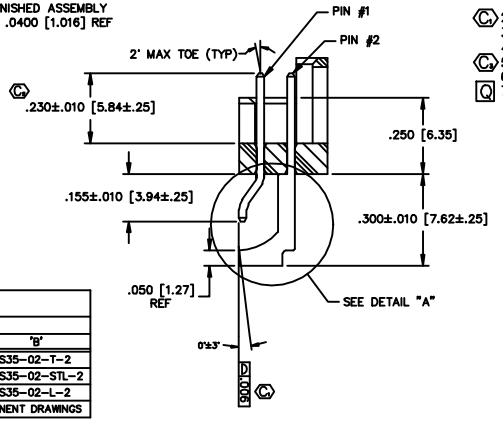

SECTION "A-A"
(ROTATED 90°)

TABLE 1					
PLATING STYLE	LEAD STYLE	ROW OPTION	PIN #1	PIN #2 'A'	PIN #2 'B'
-T	-01	-DH	T-1S6-22-T-2	T-1S35-01-T-2	T-1S35-02-T-2
-STL	-01	-DH	T-1S6-22-STL-2	T-1S35-01-STL-2	T-1S35-02-STL-2
-LM	-01	-DH	T-1S6-22-L-2	T-1S35-01-L-2	T-1S35-02-L-2
FOR OTHER PLATING OPTIONS REFER TO T-1S6-XX-XXX-2, AND T-1S35-XX-XXX-2 COMPONENT DRAWINGS					

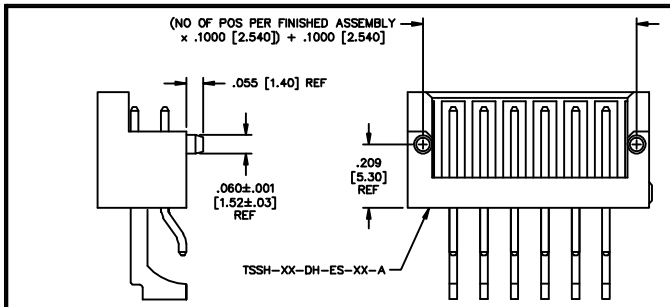

FIG. 2
-A: ALIGNMENT PIN OPTION

PACKAGING VIEW

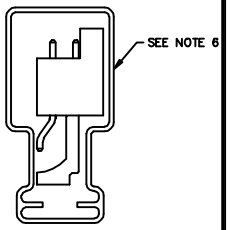

PACKAGING TABLE		
ROW OPTION	PACKAGING TUBE	PLUG
-DH	PT-1-24-01-44	TP-07

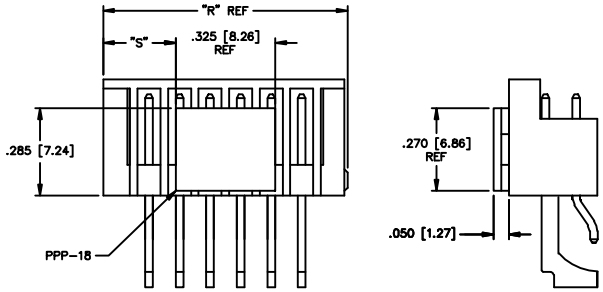

FIG. 3
-P: PICK AND PLACE PAD OPTION
(USE PPP-18, 5 POS. MIN)

FOR ODD # POSITION FG
"R" = (No OF POS + 2) x .100 [2.54]
"S" = {("R" - .325 [8.26]) / 2} ±.020 [.51]

FOR EVEN # POSITION FG
"R" = (No OF POS + 1) x .100 [2.54]
"S" = {("R" - .325 [8.26]) / 2} ±.020 [.51]

PROPRIETARY NOTE
THIS DOCUMENT CONTAINS INFORMATION CONFIDENTIAL AND PROPRIETARY TO SAMTEC INC. AND SHALL NOT BE REPRODUCED OR TRANSFERRED TO OTHER DOCUMENTS OR DISCLOSED TO OTHERS OR USED FOR ANY PURPOSE OTHER THAN THAT FOR WHICH IT WAS OBTAINED WITHOUT THE EXPRESSED WRITTEN CONSENT OF SAMTEC INC.

MISC\MKTG
TSSH-1XX-01-XXX-XX-XX-MKT

samtec
520 PARK EAST BLVD. NEW ALBANY, INDIANA 47150
PHONE (812) 944-6733 P.O. BOX 1147
CODE 55322

MADE BY: BURRES 10-10-98

TSSH-1XX-01-XXX-XX-XX

SHEET 1 OF 2