SPECIFICATIONS

D-SUB Connector

UD Series
Right Angle Type, T/H
2.77mm [.109”] Pitch
with Filter
9 Pos. (Male) +
9 Pos. (Male)

Mechanical
Mating Force: *3.1kg (6.8Lb) max.*
Unmating Force: *0.2kg (0.4Lb) min.*
Contact Retention Force: *1.8kg (4.0Lb) min.*

Electrical
Current Rating: *2.0A*
Contact Resistance: *35mW max.*
Dielectric Withstanding Voltage: *1000V AC/1min min.*
Insulation Resistance: *5000MW*

Physical
Housing: *Thermoplastic, UL 94V-0 rated in Black Color*
Contact: *Copper alloy*
Plating: *See “ORDERING INFORMATION”*
Solder Pad: *Copper alloy*
Operating Temperature: *-55℃ to +105℃*

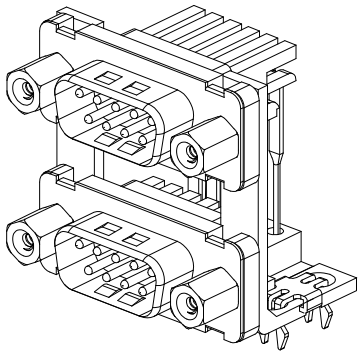

DRAWING

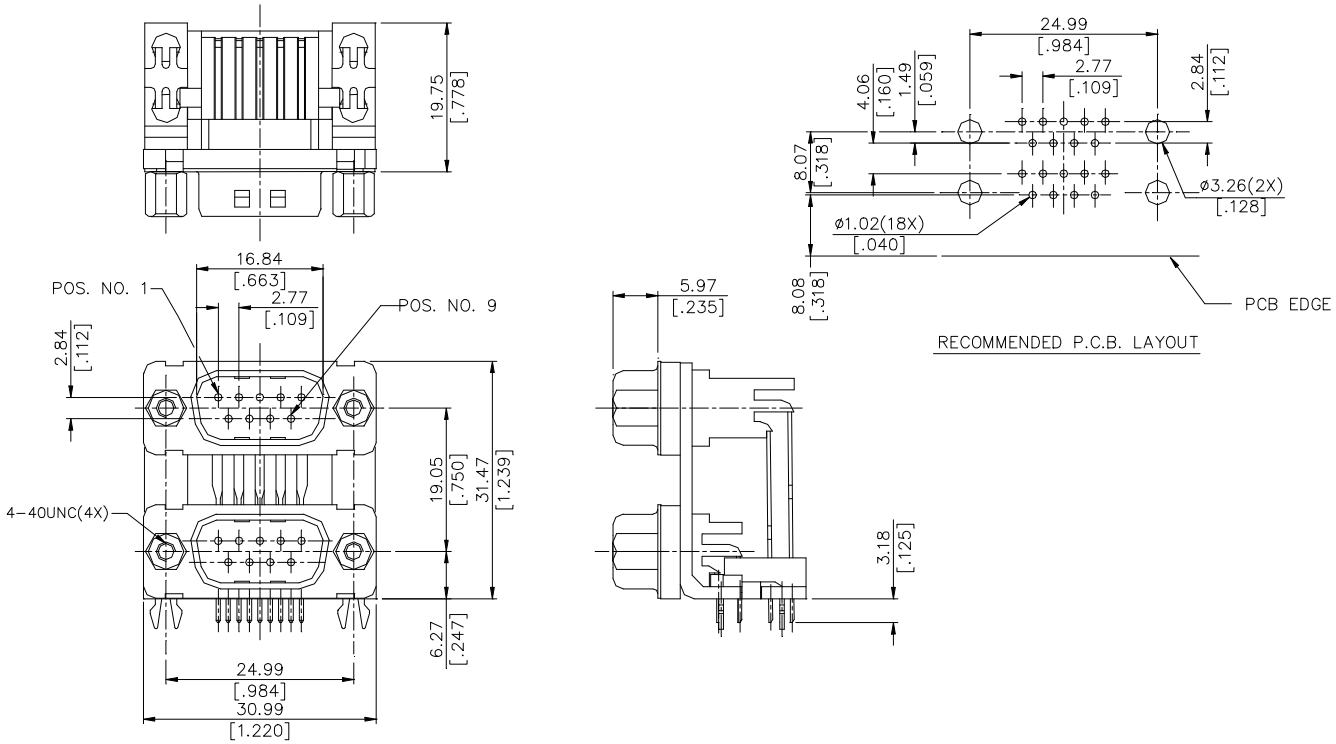

ORDERING INFORMATION

PRODUCT NO.: UD B A 1 * - ** - D A A F

- D-sub Series
- Body Type
  B=Right Angle PCB Mount
- Termination Type
  A=Male
- No. of Pos.
  1=9 Pos.
- Contact Area Plating
  1=Gold Flash
  3=30u" Gold
- Extension Code
  82=W/O Female Screw Lock
  83=W/ Female Screw Lock
- Type of Capacitance Value
  D=82PF
- Operating Voltage
  A=50V max.
- Packaging
  A=Tube
- Lead Free

All specification & dimensions are subject to change, please call your nearest Foxconn sales representative for update information.