# Major League Electronics .100 cl Low Profile Terminal Strip Header - Custom Right Angle

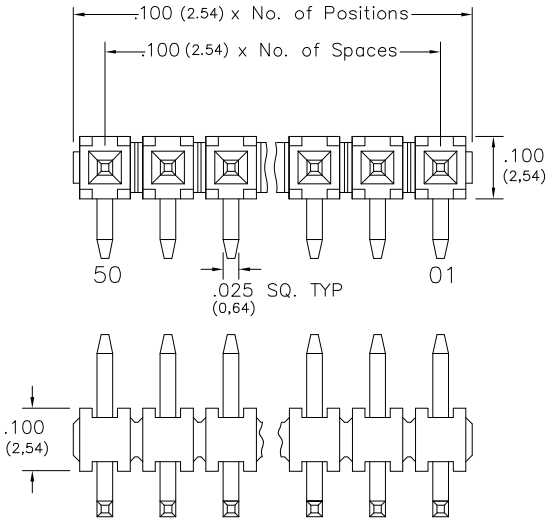


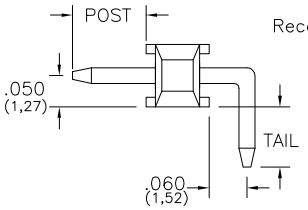


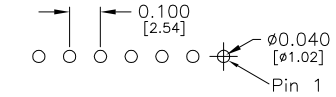


Recommended P.C. Board Layout

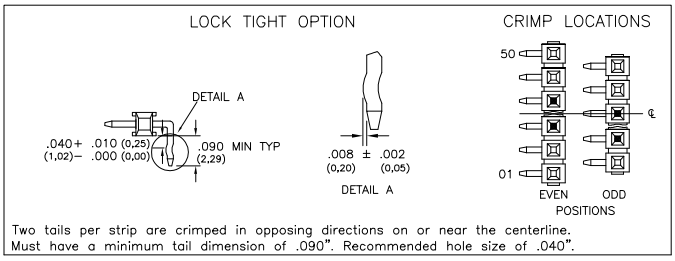


Two tails per strip are crimped in opposing directions on or near the centerline.
Must have a minimum tail dimension of .090". Recommended hole size of .040".

Length (L) − Post Height (P) − .190 (4.83) = Tail Length (T) Tails may be clipped to achieve desired pin length

## Ordering Information

LTSHCR-1 [XX] – [S] – [XX] – [XXX] – [XX] – [XX] – [XXX] – [X] – [LF]

- Pins Per Row: 01 - 50
- Row Specification: S = Single Row
- Desired Post Height: Please specify, e.g. .100 (2.54) = 100
- Lead Free
- Every Other Pin Filled (.200 Centers): Leave blank if not needed; E = Filled
- Polarized Position: Leave blank if not needed; If required, specify empty pin position, e.g. 012 for Pin 12
- Lock Tight "LT" (Optional): Leave blank if not needed; LT = With

| | Pin Option | | | |
|---|---|---|---|---|
| Max Post | | Length | | |
| .150 | 3.81mm | .430 | 10.92mm | 06 |
| .165 | 4.19mm | .445 | 11.30mm | 08 |
| .176 | 4.47mm | .456 | 11.58mm | 10 |
| .200 | 5.08mm | .480 | 12.19mm | 11 |
| .250 | 6.35mm | .530 | 13.46mm | 14 |
| .350 | 8.89mm | .630 | 16.00mm | 16 |
| .450 | 11.43mm | .730 | 18.54mm | 20 |
| .550 | 13.97mm | .830 | 21.08mm | 22 |
| .650 | 16.51mm | .930 | 23.62mm | 24 |
| .750 | 19.05mm | 1.030 | 26.16mm | 26 |
| .850 | 21.59mm | 1.130 | 28.70mm | 28 |
| .950 | 24.13mm | 1.230 | 31.24mm | 30 |
| 1.050 | 26.67mm | 1.330 | 33.78mm | 32 |
| 1.150 | 29.21mm | 1.430 | 36.33mm | 34 |
| 1.250 | 31.75mm | 1.530 | 38.86mm | 36 |

| | Plating Options |
|---|---|
| G | - 10µ Gold on Contact area/Flash on Tail |
| T | - Matte Tin all Over |
| GT | - 10µ Gold on Contact Area / Matte Tin on Tail |
| H | - 30µ Gold on Contact Area / Matte Tin on Tail |
| F | - Gold Flash over Entire Pin |

Specifications
Current Rating: 3.0 Ampere
Insulation Resistance: 1000MΩ Min.
Dielectric Withstanding: 600V AC
Contact Resistance: 20 mΩ Max.
Operating Temperature: -40°C to + 105°C
Max. Process Temperature:
- Peak: 260°C up to 20 secs.
- Process: 230°C up to 60 secs.
- Wave: 260°C up to 6 secs.
- Manual Solder: 350°C up to 5 secs.

Materials
Contact Material: Phosphor Bronze
Insulator Material: Nylon 6T
Plating: Au or Sn over 50µ" (1,27) Ni

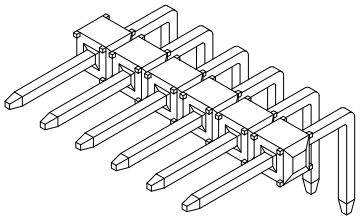

Mates with:
BCSS,
BSSH,
BSSHC,
BSSQ,
BSSQC,
BSSQM,
LBCSS,
LSMBC,
LSWSS,
SMBC,
SSHQ,
SSHQR,
SSHR,
SSHS,
SSHSM

Products cut to specific sizes are uncancellable/nonreturnable — Parts are subject to change without notice

| LTSHCR-1-S SERIES | .100 cl Single Row - Right Angle Low Profile Terminal Strip Header - Custom | 16 JAN 07 | Scale NTS |
|---|---|---|---|

UNLESS OTHERWISE SPECIFIED DIMENSIONS IN INCHES (MM) TOLERANCES ARE:
ONE PLACE DECIMALS ±.100
TWO PLACE DECIMALS ±.010
THREE PLACE DECIMALS ±.005
FOUR PLACE DECIMALS ±.0020
ANGLES ±5°


Major League Electronics
4235 Earnings Way, New Albany, Indiana, 47150, USA
1-800-782-3486 (USA/Canada/Mexico)
Tel: 812-944-7244
Fax: 812-944-7268
E-mail: mle@mlelectronics.com
Web: www.mlelectronics.com


Edition 1

Sheet 1/1