REVISION U

NOTES:

1. HIDDEN LINES ARE USED TO SHOW POLARIZATION WHEN USING -N OPTION.
2. ⓒ REPRESENTS A CRITICAL DIMENSION.
3. FFSD CABLE ASSEMBLIES ARE LEAD FREE.
4. ALL ASSEMBLIES TO BE 100% ELECTRICALLY TESTED (C3) FOR SHORTS AND OPENS.
5. ALL ASSEMBLIES TO BE 100% HI-POT TESTED AT 630V.
6. STRAIN RELIEF TO WITHSTAND 5LB[22N] STRAIGHT PULL.

DO NOT SCALE FROM THIS PRINT

FFSD-XX-X-XX.XX-01-X-X-XXX

No OF POSITIONS
-02 THRU -25
(PER ROW)

END ASSEMBLY
-S: SINGLE END
-D: DOUBLE END

ASSEMBLY LENGTH
(2.00[50.8] MINIMUM)

LEAD STYLE

PLATING OPTIONS
- LEAVE BLANK FOR STANDARD, USE C-67-L
-S: USE C-67-S
-F: USE C-67-F

*** = NOT RELEASED FOR PRODUCTION**

OPTION
-RW: REVERSE WIRING
-D"XX": DAISY CHAIN (MINIMUM 2.00[50.8], 1.00[25.4] INCREMENTS)
-R: REVERSED
-RN1: REVERSE POLARIZATION NOTCH
-RN2: REVERSE POLARIZATION NOTCH
-M: MIDDLE REVERSE
-O: OUTSIDE REVERSE
* -SR: STRAIN RELIEF (NOT AVAILABLE WITH -S, -O, -M, -R, OR -DXX) (SOLD AS ASSEMBLIES ONLY)

STANDARD POLARIZATION NOTCH
-N: POLARIZATION NOTCH (NOT AVAILABLE IN -02 THRU -04) (LEAVE BLANK FOR -02, -03, -04)

FIG. 1
(FFSD-10-D-XX.XX-01-X-N SHOWN)

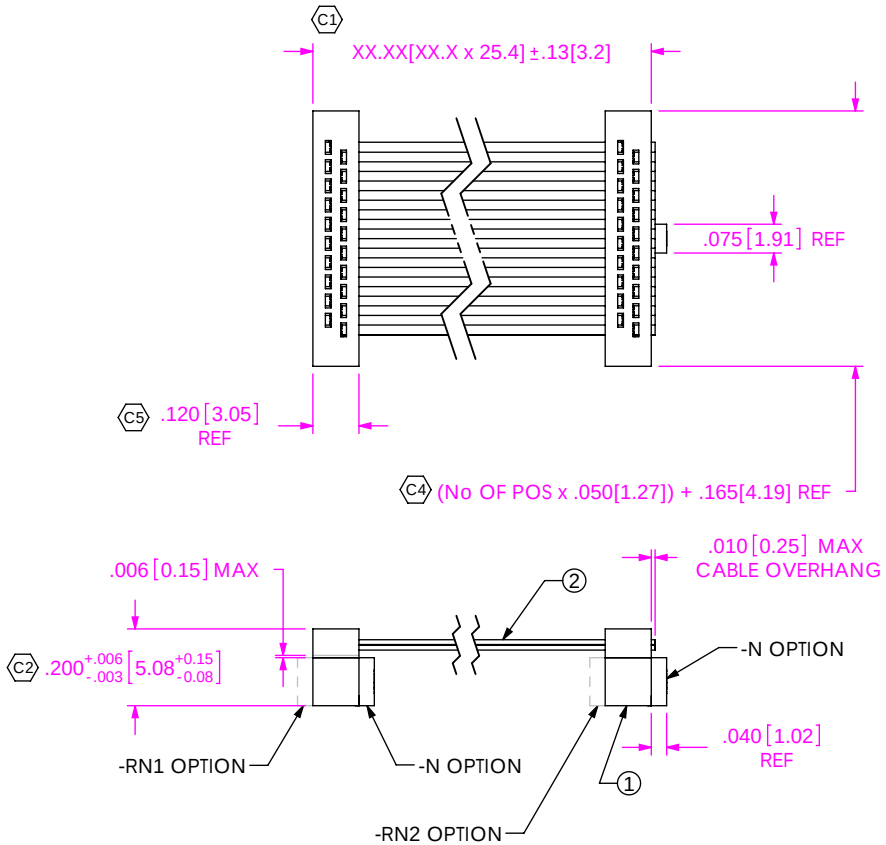

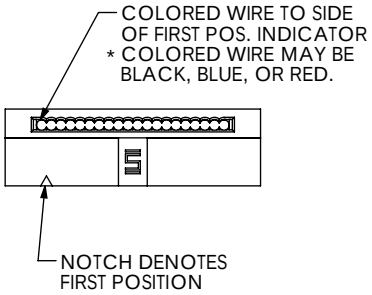

FIG. 2
(FFSD-10-S-XX.XX-01-X-N SHOWN)
(SAME AS FIG. 1, DIFFERENT AS SHOWN)

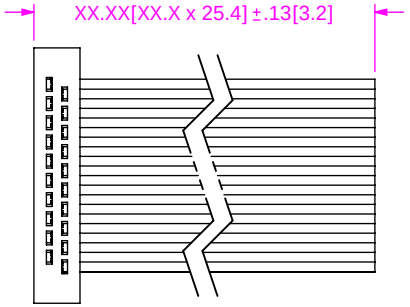

FIG. 3
(FFSD-10-X-XX.XX-01-X-N-RW SHOWN)

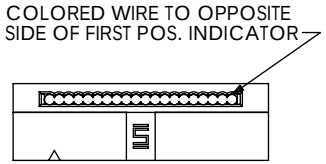

TABLE 1

ITEM #	PART
1	FFSD-XX-01-X-N-XX
2	CB-XX-30-7/38-025-GR
3	FFSD-XX-01-X-N-SR
4	FFSR-XX

c:\enterprisevault\DWG\MISC\MKTG\FFSD-XX-X-XX.XX-01-X-X-XXX-MKT.SLDDRW

UNLESS OTHERWISE SPECIFIED, DIMENSIONS ARE IN INCHES.
TOLERANCES ARE:
DECIMALS .XX: ±.01 [.3] .XXX: ±.005 [.13] .XXXX: ±.0020 [.051]
ANGLES 2°

PROPRIETARY NOTE
THIS DOCUMENT CONTAINS INFORMATION CONFIDENTIAL AND PROPRIETARY TO SAMTEC, INC. AND SHALL NOT BE REPRODUCED OR TRANSFERRED TO OTHER DOCUMENTS OR DISCLOSED TO OTHERS OR USED FOR ANY PURPOSE OTHER THAN THAT WHICH IT WAS OBTAINED WITHOUT THE EXPRESSED WRITTEN CONSENT OF SAMTEC, INC.

samtec
520 PARK EAST BLVD, NEW ALBANY, IN 47150
PHONE: 812-944-6733 FAX: 812-948-5047
e-Mail: info@SAMTEC.com code: 55322

MATERIAL: DO NOT SCALE DRAWING SHEET SCALE: 2:1
INSULATORS: PBT, COLOR: BLACK
CONTACT: BeCu
CABLE: TINNED COPPER, COLOR: GRAY
PLATING: .000010 GOLD OVER .000050 NICKEL
REMAINDER: .000200 REF TIN OVER .000050 NICKEL

DESCRIPTION:
.050 x .050 DOUBLE ROW FEMALE IDC ASSEMBLY

DWG. NO.
FFSD-XX-X-XX.XX-01-X-X-XXX

BY: T NEWTON 02/15/2008 SHEET 1 OF 3

REVISION U

FIG. 3
(FFSD-10-D-XX.XX-01-X-N-RN1 SHOWN)
(SAME AS FIG. 1, DIFFERENT AS SHOWN)

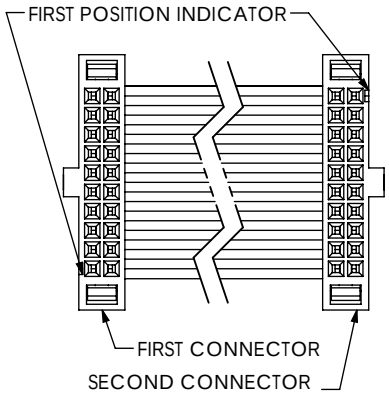

(FFSD-10-D-XX.XX-01-X-N-RN2 SHOWN)
(SAME AS FIG. 1, DIFFERENT AS SHOWN)

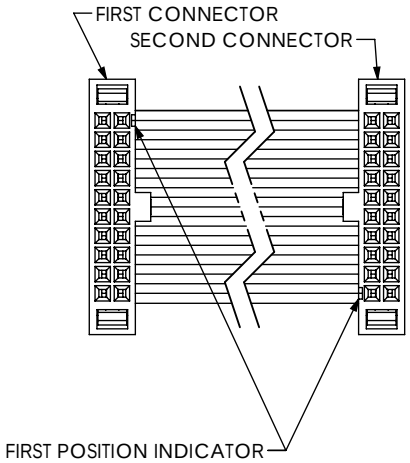

NOTE:
-RN1 = REVERSE NOTCH ON 1ST CONNECTOR ONLY
(NOT AVAILABLE WITH -R OPTION)
-RN2 = REVERSE NOTCH ON 2ND CONNECTOR ONLY
(NOT AVAILABLE WITH -R OPTION)

(REVERSE NOTCH NOT AVAILABLE WITH -RW OR ANY DAISY CHAIN OPTIONS)

FIG. 4
(FFSD-10-D-XX.XX-01-X-N-DXX-O SHOWN)
(SAME AS FIG. 1, DIFFERENT AS SHOWN)
(2.00[50.8] MINIMUM, 1.00[25.4] INCREMENTS)

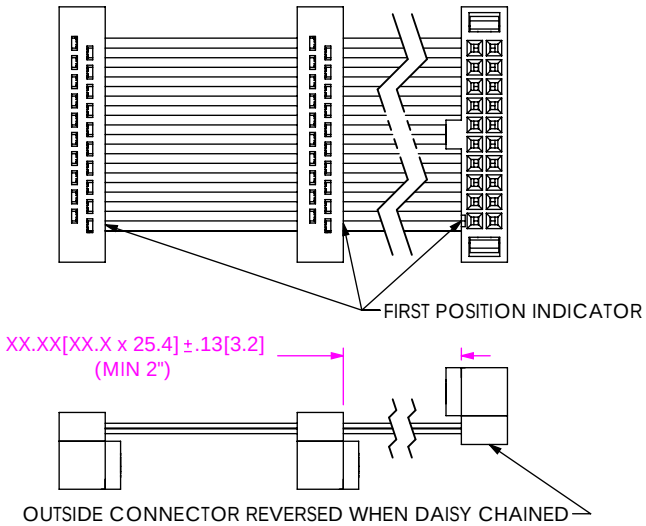

FIG. 5
(FFSD-10-D-XX.XX-01-X-N-DXX-M SHOWN)
(SAME AS FIG. 1, DIFFERENT AS SHOWN)
(2.00[50.8] MINIMUM, 1.00[25.4] INCREMENTS)

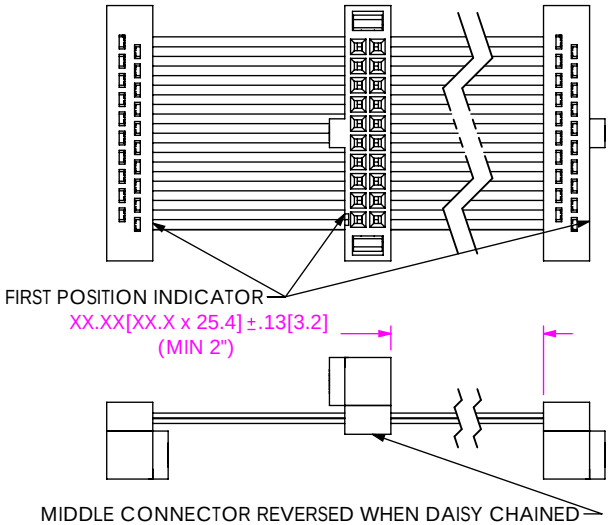

FIG. 6
(FFSD-10-D-XX.XX-01-X-N-DXX-R SHOWN)
(SAME AS FIG. 1, DIFFERENT AS SHOWN)
(NOT AVAILABLE WITH -RN1 OR -RN2 OPTION)
(2.00[50.8] MINIMUM, 1.00[25.4] INCREMENTS)

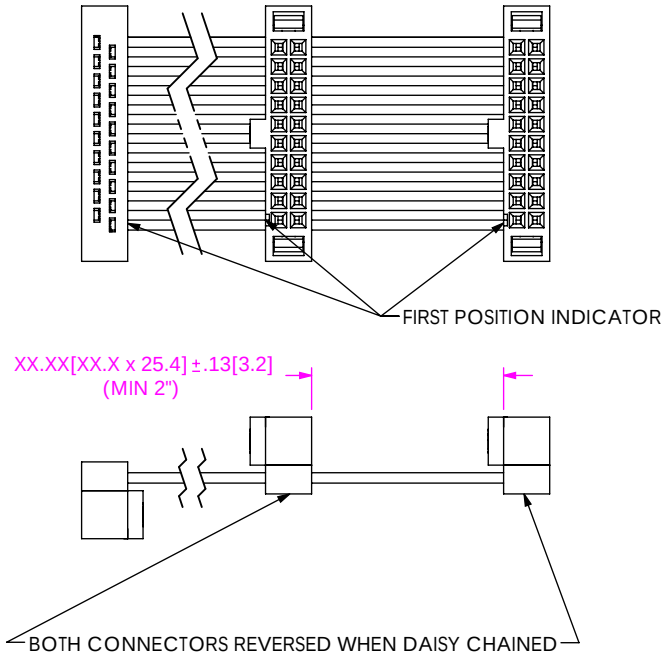

FIG. 7
(FFSD-10-D-XX.XX-01-X-N-DXX SHOWN)
(SAME AS FIG. 1, DIFFERENT AS SHOWN)
(2.00[50.8] MINIMUM, 1.00[25.4] INCREMENTS)

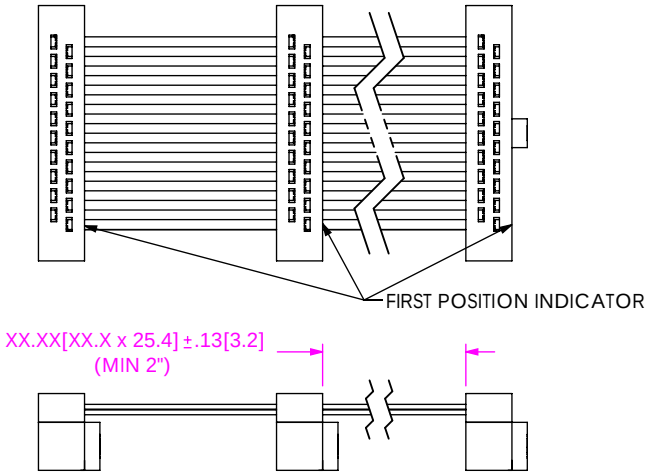

PROPRIETARY NOTE
THIS DOCUMENT CONTAINS INFORMATION CONFIDENTIAL AND PROPRIETARY TO SAMTEC, INC. AND SHALL NOT BE REPRODUCED OR TRANSFERRED TO OTHER DOCUMENTS OR DISCLOSED TO OTHERS OR USED FOR ANY PURPOSE OTHER THAN THAT WHICH IT WAS OBTAINED WITHOUT THE EXPRESSED WRITTEN CONSENT OF SAMTEC, INC.

DO NOT SCALE DRAWING

SHEET SCALE: 2:1

samtec
520 PARK EAST BLVD, NEW ALBANY, IN 47150
PHONE: 812-944-6733 FAX: 812-948-5047
e-Mail: info@SAMTEC.com code: 55322

DESCRIPTION:
.050 x .050 DOUBLE ROW FEMALE IDC ASSEMBLY

DWG. NO.
FFSD-XX-X-XX.XX-01-X-X-XXX

BY: T NEWTON 02/15/2008 SHEET 2 OF 3

c:\enterprisevault\DWG\MISC\MKTG\FFSD-XX-X-XX.XX-01-X-X-XXX-MKT.SLDDRW

REVISION U

FIG. 9
(FFSD-10-D-XX.XX-01-X-N-SR SHOWN)
(SAME AS FIG. 1, DIFFERENT AS SHOWN)

NOT RELEASED FOR PRODUCTION

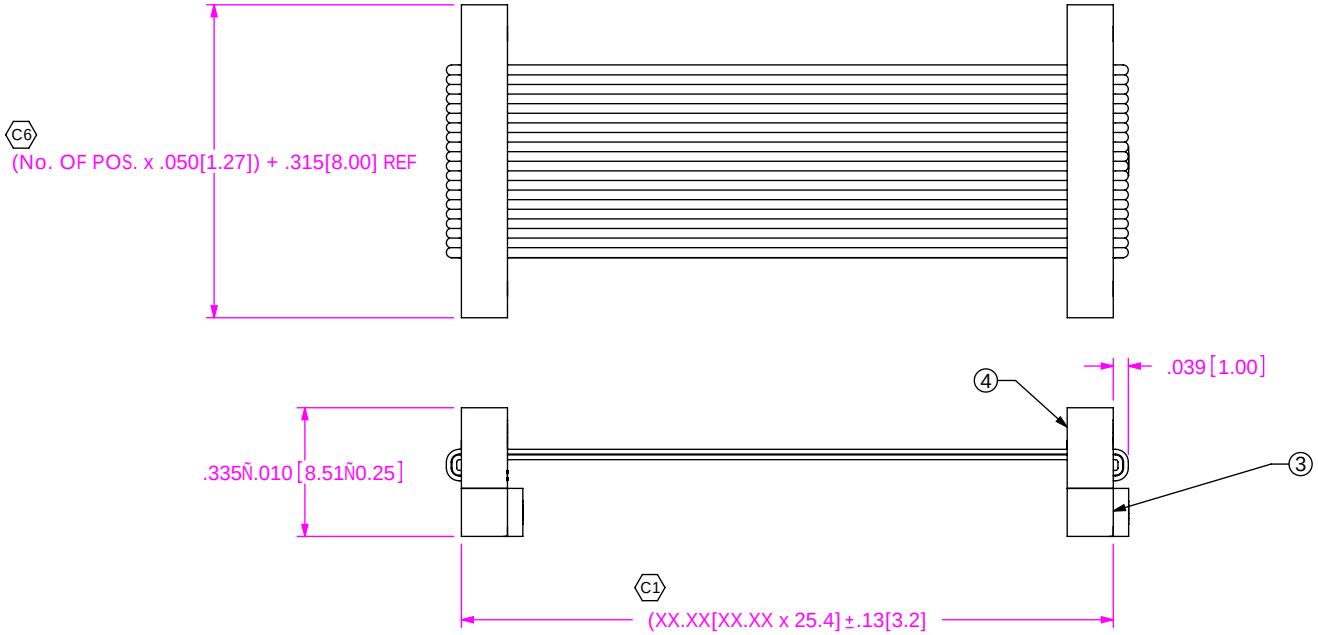

IN-PROCESS 1
(-SR ONLY)

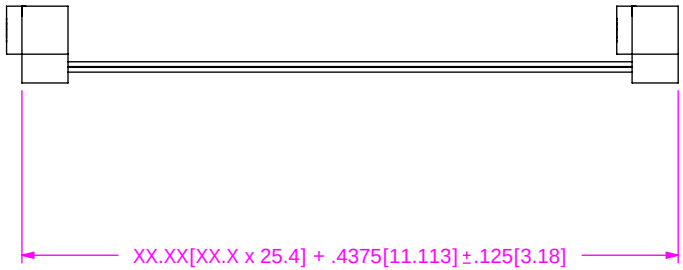

IN-PROCESS 2
(-SR ONLY)

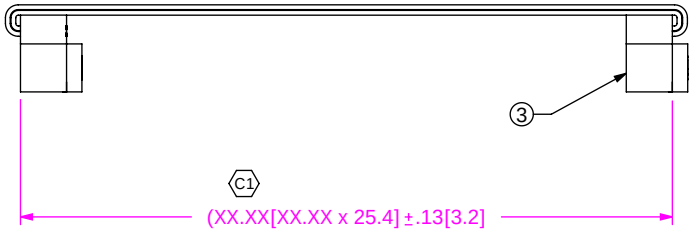

PROPRIETARY NOTE
THIS DOCUMENT CONTAINS INFORMATION CONFIDENTIAL AND PROPRIETARY TO SAMTEC, INC. AND SHALL NOT BE REPRODUCED OR TRANSFERRED TO OTHER DOCUMENTS OR DISCLOSED TO OTHERS OR USED FOR ANY PURPOSE OTHER THAN THAT WHICH IT WAS OBTAINED WITHOUT THE EXPRESSED WRITTEN CONSENT OF SAMTEC, INC.

DO NOT SCALE DRAWING

SHEET SCALE: 2:1

samtec
520 PARK EAST BLVD, NEW ALBANY, IN 47150
PHONE: 812-944-6733 FAX: 812-948-5047
e-Mail: info@SAMTEC.com code: 55322

DESCRIPTION:
.050 x .050 DOUBLE ROW FEMALE IDC ASSEMBLY

DWG. NO.
FFSD-XX-X-XX.XX-01-X-X-XXX

BY: T NEWTON 02/15/2008 SHEET 3 OF 3

c:\enterprisevault\DWG\MISC\MKTG\FFSD-XX-X-XX.XX-01-X-X-XXX-MKT.SLDDRW