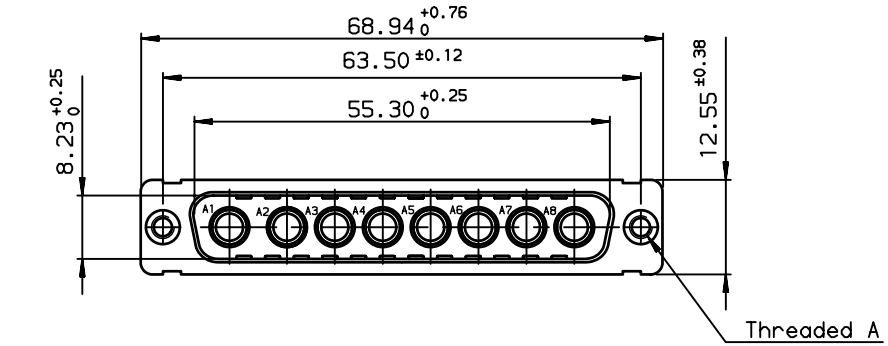

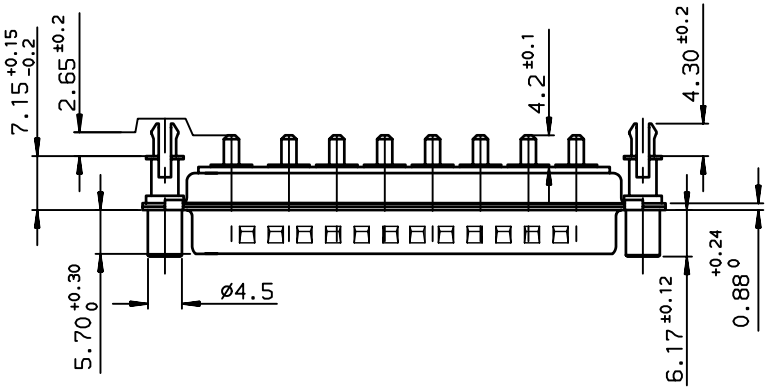

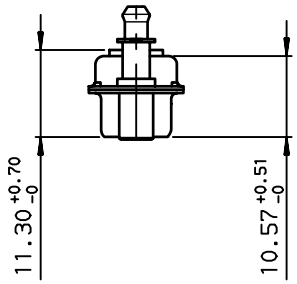

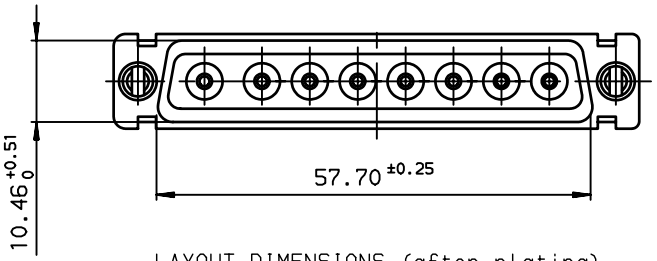

LAYOUT DIMENSIONS (after plating)

CONNECTOR SIDE VIEW

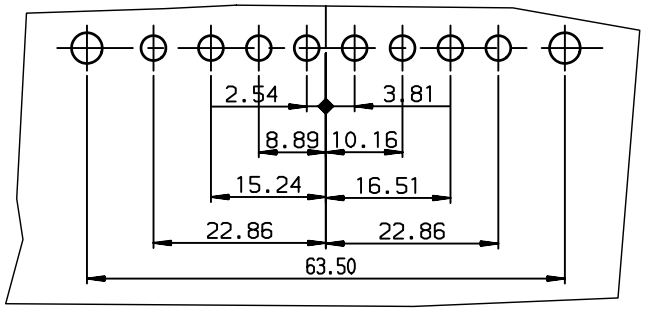

TIN LEAD PART NUMBER

DCI8W8P300H30	M3
DCV8W8P300H30	UNC 4.40
PART NUMBER	Threaded A

GENERAL CHARACTERISTICS : SEE DRAWING C01-8639-0001

European Views

www.fciconnect.com			surface ISO 1302		tolerance std ISO 406 ISO 1101		projection	mm
			TOLERANCES UNLESS OTHERWISE SPECIFIED					
Dr	JARRY	2003/08/19	ANGULAR	LINEAR	0.X	±0.1	size A3	Scale 1.5
Eng	PESSON	2003/08/19			0.XX	±0.1		
Chr	LEGARE	2003/08/19	0.XX° ±2°		0.XXX	±0.1	ECN	LS07-0070
Appr	LEGARE	2003/08/19	Product family			D-SUB	Spec ref	-
title	PIN CONNECTOR WITH POWERS CONTACTS						dwg no	C01-8639-2051
catalog no						-	CUSTOMER	sheet 1 of 1

Rev. E

rev	ecn no	dr	date
B	-	DEB	2003/09/22
C	LS05-001	MPE	2005/03/10
D	LS06-0095	LGO	2006/07/18
E	LS07-0070	MPE	2007/03/06
-	-	-	-
-	-	-	-
-	-	-	-

REV F - 2006-04-17

Copyright FCI.