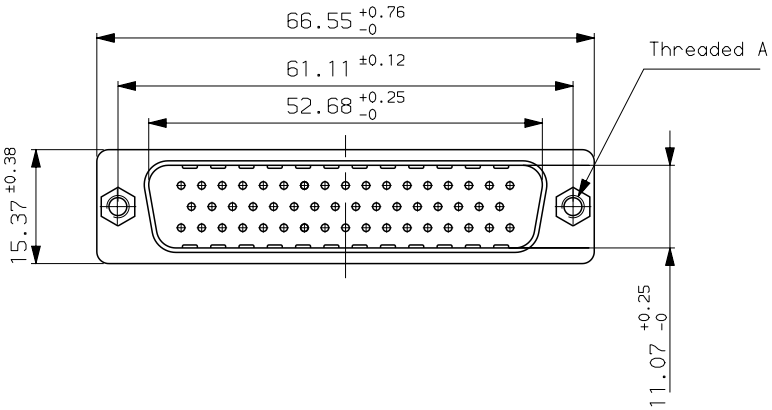

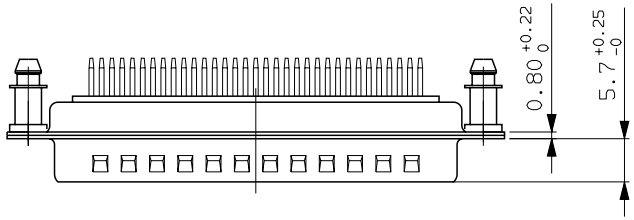

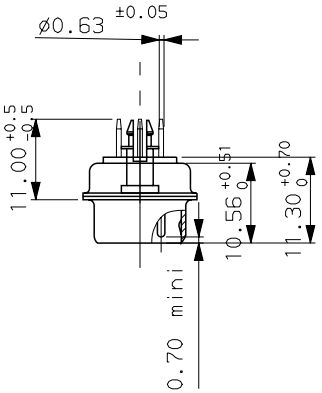

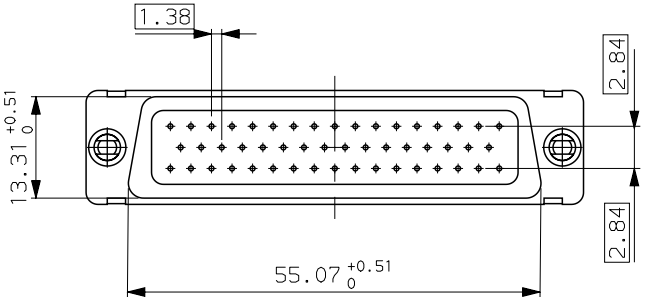

ELECTRICAL DATA

-I max	7.5A
-Contact resistance	≤7.3mΩ
-Insulation resistance	≥5000MΩ
-TEST VOLTAGE	
contact/contact	≥1000V
contact/ground	≥1200V

MECHANICAL DATA

-Contact force	≥0.14N
-Retention force	≥40N
-Insertion force	according t0 DIN41652 Part 2
-Withdrawal force	according t0 DIN41652 Part 2
-Mechanical endurance	:500 matings / unmatings
-Material shell	steel,cadmium
-Material insulator	glass filled thermoplastic UL94V0
-Material contacts	pin:brass;
-Finish on contact area	0.4 µ gold over nickel
-Finish on termination end	bright tin-lead over nickel
-Solderability	according to DIN 41640 Part 70,test 12a
-Schock	according to DIN41640 Part 14,test 6c,50g
-Vibration	according to DIN41640 Part 15,test 6d,20g
	10 t0 2000Hz:discontinuity≤1µs

ENVIRONMENTAL DATA

-Climatic category	-55°/ +125° /56
-Corrosion	salt spray:48h

LAYOUT DIMENSIONS (after plating)

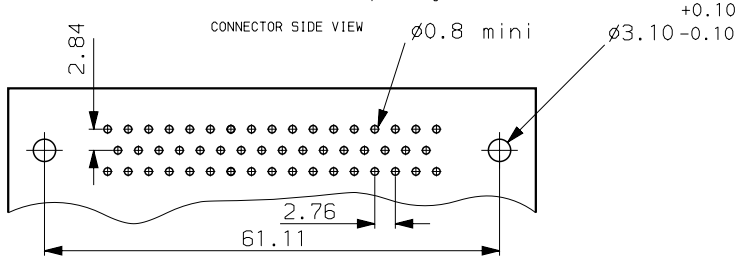

DDPL50P300GTX	M3
DDP050P300GTX	UNC 4.40
PART NUMBER	Threaded A

ISS	DATE	Latest modification by : BART.S	MOD N°
a	15/01/04	first issue ----	--

Designed by: BART.S date:15/01/04 Type of drawing: CUSTOMER

TITLE : PIN CONNECTORS SUB D WITH STRAIGHT SPILLS.

SCALE: 1.5 SHEET 1/1

FCI FRAMATOME GROUP
FRAMATOME CONNECTORS FRANCE
Rue Louis Breguet - BP 05
72024 LE MANS Cedex
Tel. 33 (16) 43.84.08.43

This document is the property of FRAMATOME CONNECTORS FRANCE It must not be reproduced or communicated without permission in writing from the owners

FORMAT A3 | SOURIAU DRG N° C01-8637-1642 | PROJECT M94D001

PDM: Rev:A STATUS:Released Printed: Jan 19, 2010