REVISION D

DESIGNED & DIMENSIONED IN MILLIMETERS [INCHES]

ERM8-XXX-01-X-D-RA-XX-TR

D No OF POSITIONS
-010, -013, -020, -025
-030, -037, -040, -049, -050
-060, *-070, *-075
(PER ROW)

LEAD STYLE
-01: 1.58 [0.062] BOARD
*-02: 2.36 [0.093] BOARD

PLATING SPECIFICATION
-S: SELECTIVE GOLD
(USE T-1MXX-01-S, T-1MXX-02-S)
(SEE TABLE 6)
-L: LIGHT SELECTIVE GOLD, MATTE TIN TAIL
(USE T-1MXX-01-L, T-1MXX-02-L)
(SEE TABLE 6)

* = NOT TOOLED

TAPE & REEL OPTION
-TR : TAPE & REEL
(STANDARD PACKAGING)
(SEE NOTE 4)

OPTION
-K: KAPTON PAD
(USE K-500-300)
D -L: ESD LATCHES (SEE TABLE 4 FOR AVAILABILITY)
D -DS: DIFFERENTIAL PAIR (HOT SWAP)(SEE FIG. 2 SHT 5)
(SEE TABLE 4 FOR AVAILABILITY)

-RA: RIGHT ANGLE

ROW SPECIFICATION
-D: DOUBLE (USE ERM8-XXX-01-D-RA)

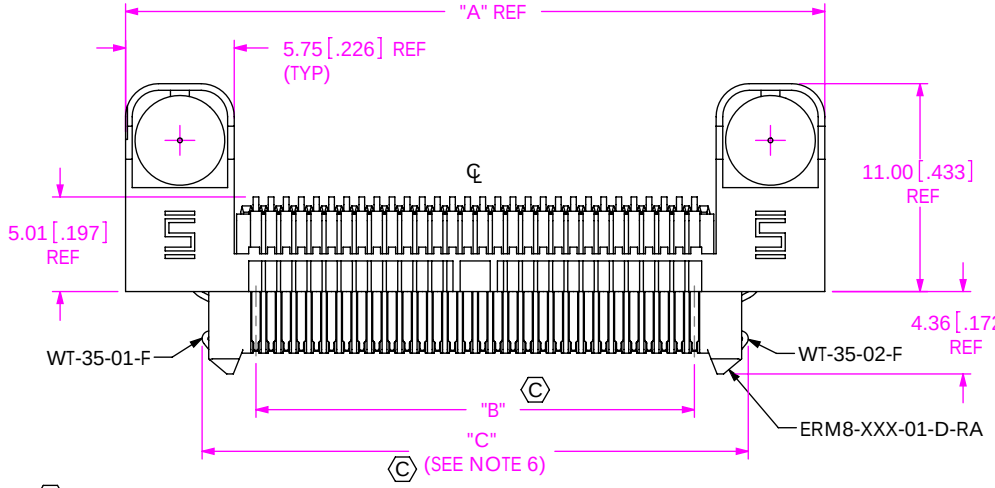

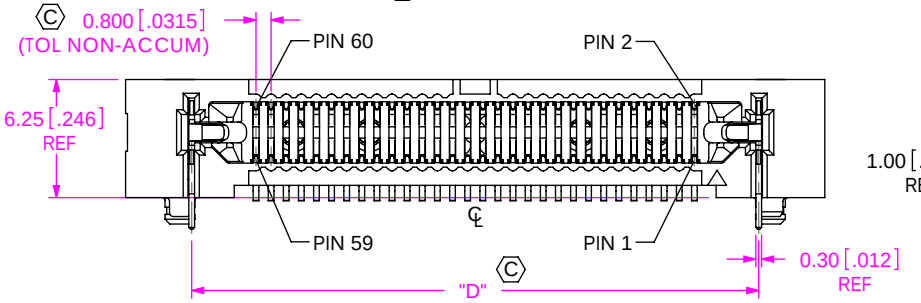

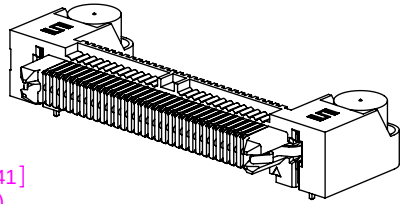

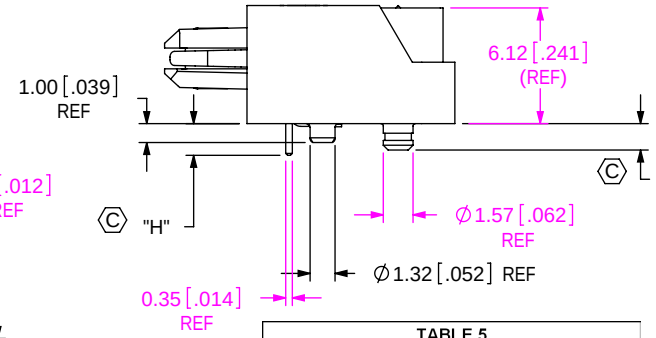

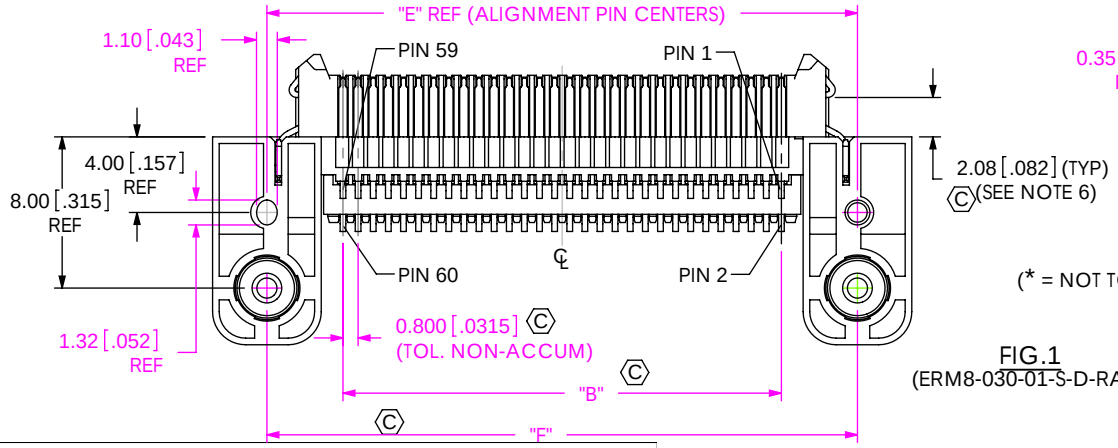

(* = NOT TOOLED)

FIG.1
(ERM8-030-01-S-D-RA-L)

TABLE 4

POSITION	-DS & -L OPTION AVAILABILITY
-010	-L
-013	-DS, -L
-020	-L
-025	-DS, -L
-030	-L
-037	-DS, -L
-040	-L
-049	-DS, -L
-050	-L
-060	-L
*-070	-L
*-075	-L

TABLE 5

LEAD STYLE	"H"		"J"	
-01	1.68	[.066]	1.40	0.055
*-02	2.46	[.097]	2.19	0.086

NOTES:

1. Ⓒ REPRESENTS A CRITICAL DIMENSION.
2. BURR ALLOWANCE: .02[0.001] MAX.
3. MINIMUM PUSHOUT /PULLOUT FORCE: SIGNAL: 2.22 N [.5 LB], LATCH AND COUNTERWEIGHT: 4.45 N [1 LB].
4. FOR QUANTITIES UP TO 49 PIECES, NO LEADER, TRAILER, OR EIA-481-D REEL TO BE SUPPLIED. FOR QUANTITIES FROM 50-124 PIECES, NO LEADER OR TRAILER WILL BE SUPPLLIED.
5. MEASURE AT BENDS.
6. APPLIES TO -L OPTION ONLY.
7. MAXIMUM CUT BURR ON CUT TAILS IS 0.10[.004].

TABLE 1

POSITION	"A"		"B"		"C"		"D"		"E"		"F"	
-010	21.00	[.827]	7.200	[.2835]	12.90	[.508]	14.00	[.551]	15.25	[.600]	15.25	[.600]
-013	23.40	[.921]	9.600	[.3780]	15.30	[.602]	16.40	[.646]	17.65	[.695]	17.65	[.695]
-020	29.00	[1.142]	15.200	[.5984]	20.90	[.823]	22.00	[.866]	23.25	[.915]	23.25	[.915]
-025	33.00	[1.299]	19.200	[.7559]	24.90	[.980]	26.00	[1.024]	27.25	[1.073]	27.25	[1.073]
-030	37.00	[1.457]	23.200	[.9134]	28.90	[1.138]	30.00	[1.181]	31.25	[1.230]	31.25	[1.230]
-037	42.60	[1.677]	28.800	[1.1339]	34.50	[1.358]	35.60	[1.402]	36.58	[1.451]	36.85	[1.451]
-040	45.00	[1.772]	31.200	[1.2283]	36.90	[1.453]	38.00	[1.496]	39.25	[1.545]	39.25	[1.545]
-49	52.20	[2.055]	38.400	[1.5118]	44.10	[1.736]	45.20	[1.780]	46.45	[1.829]	46.45	[1.829]
-050	53.00	[2.087]	39.200	[1.5433]	44.90	[1.768]	46.00	[1.811]	47.25	[1.860]	47.25	[1.860]
-060	61.00	[2.402]	47.200	[1.8583]	52.90	[2.083]	54.00	[2.126]	55.25	[2.175]	55.25	[2.175]
*-070	69.00	[2.717]	55.200	[2.1732]	60.90	[2.398]	62.00	[2.441]	63.25	[2.490]	63.25	[2.490]
*-075	73.00	[2.874]	59.200	[2.3307]	64.90	[2.555]	66.00	[2.598]	67.25	[2.648]	67.25	[2.648]

* = NOT TOOLED

UNLESS OTHERWISE SPECIFIED, DIMENSIONS ARE IN MILLIMETERS [INCHES].
TOLERANCES ARE:
DECIMALS — ANGLES
X.X: ±0.3 [.01] — 2°
X.XX: ±0.13 [.005]
X.XXX: ±0.051 [.0020]

PROPRIETARY NOTE
THIS DOCUMENT CONTAINS INFORMATION CONFIDENTIAL AND PROPRIETARY TO SAMTEC, INC. AND SHALL NOT BE REPRODUCED OR TRANSFERRED TO OTHER DOCUMENTS OR DISCLOSED TO OTHERS OR USED FOR ANY PURPOSE OTHER THAN THAT WHICH IT WAS OBTAINED WITHOUT THE EXPRESSED WRITTEN CONSENT OF SAMTEC, INC.

samtec
520 PARK EAST BLVD, NEW ALBANY, IN 47150
PHONE: 812-944-6733 FAX: 812-948-5047
e-Mail: info@SAMTEC.com code: 55322

MATERIAL: DO NOT SCALE DRAWING SHEET SCALE: 2:1
INSULATOR: LCP, COLOR BLACK
CONTACTS: PHOS BRONZE
COUNTERWEIGHT: BRASS
LATCHES: BeCu

DESCRIPTION:
.80mm DUAL ROW RIGHT ANGLE SOCKET ASSEMBLY

DWG. NO.
ERM8-XXX-01-X-D-RA-XX-TR

BY: C. PIERCE 8/17/2007 SHEET 1 OF 5

c:\enterprisevault\DWG\MISC\MKTG\ERM8-XXX-01-X-D-RA-XX-TR-MKT.SLDDRW

REVISION D

TABLE 2	
No OF POSITIONS	COPLANARITY
-010 THRU -050	0.10[.004]
-060 THRU -075	0.15[.006]

TABLE 3 D	
POS	"G"
-010	7.50
-013	8.70
-020	11.50
-025	13.50
-030	15.50
-037	18.30
-040	19.50
-049	23.10
-050	23.50
-060	27.50
*-070	31.50
*-075	33.50

* = NOT TOOLED

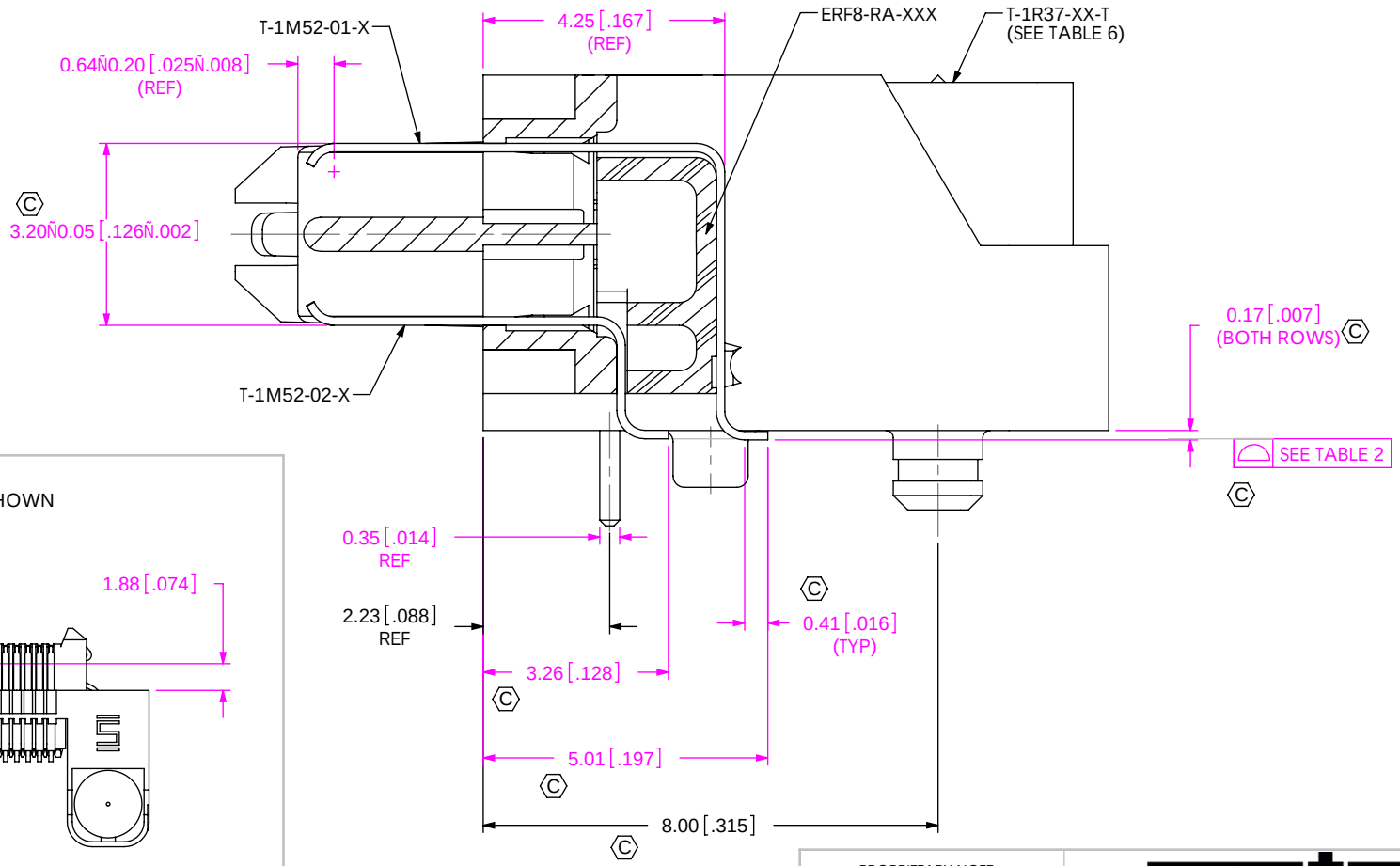

-K: KAPTON PAD

ERM8-030-01-X-D-RA-L-K SHOWN
(USE K-500-300)

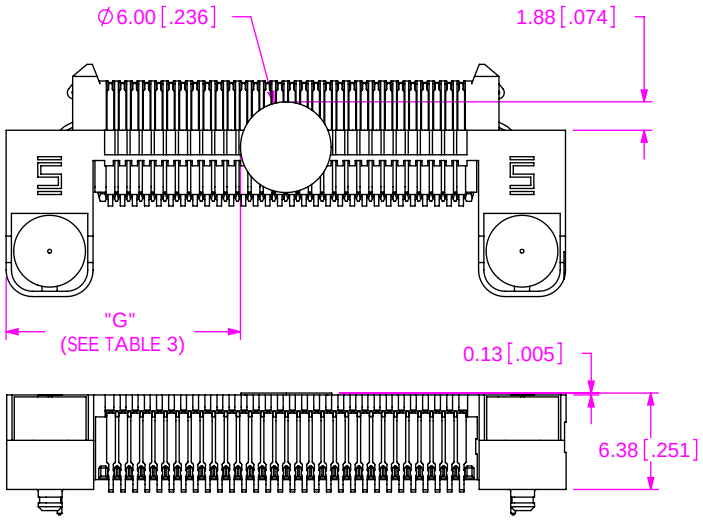

c:\enterprisevault\DWG\MISC\MKTG\ERM8-XXX-01-X-D-RA-XX-TR-MKT.SLDDRW

PROPRIETARY NOTE

THIS DOCUMENT CONTAINS INFORMATION CONFIDENTIAL AND PROPRIETARY TO SAMTEC, INC. AND SHALL NOT BE REPRODUCED OR TRANSFERRED TO OTHER DOCUMENTS OR DISCLOSED TO OTHERS OR USED FOR ANY PURPOSE OTHER THAN THAT WHICH IT WAS OBTAINED WITHOUT THE EXPRESSED WRITTEN CONSENT OF SAMTEC, INC.

DO NOT SCALE DRAWING

SHEET SCALE: 8:1

samtec

520 PARK EAST BLVD, NEW ALBANY, IN 47150
PHONE: 812-944-6733 FAX: 812-948-5047
e-Mail: info@SAMTEC.com code: 55322

DESCRIPTION:
.80mm DUAL ROW RIGHT ANGLE SOCKET ASSEMBLY

DWG. NO.
ERM8-XXX-01-X-D-RA-XX-TR

BY: C. PIERCE 8/17/2007 SHEET 2 OF 5

REVISION D

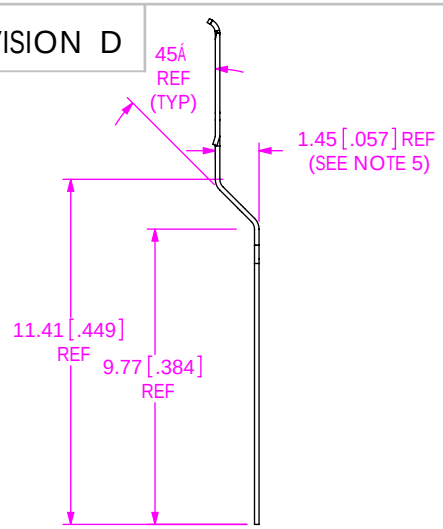

IN-PROCESS 1
(PRE-FORM TERMINAL T-1M52-02-X & T-1M69-02-X)

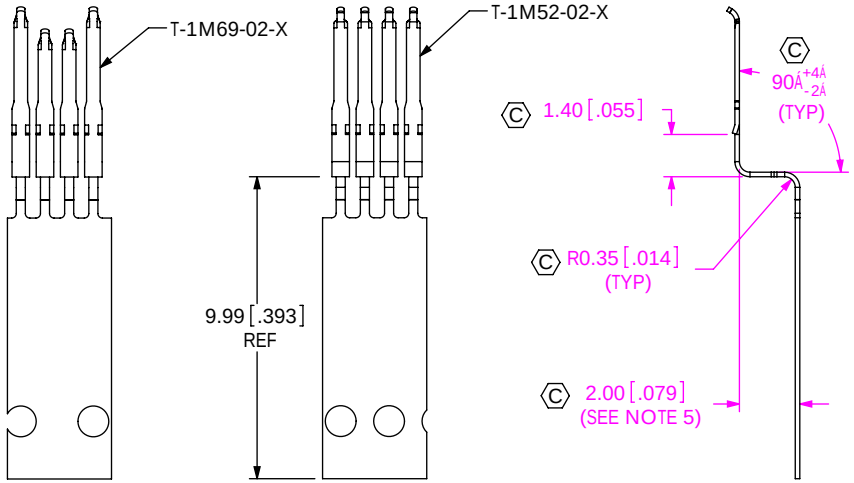

IN-PROCESS 2
(FORM TERMINAL T-1M52-02-X & T-1M69-02-X)

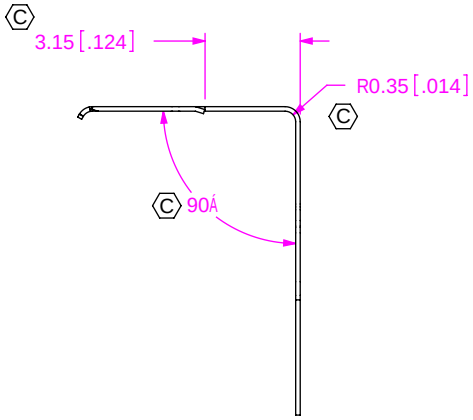

IN-PROCESS 3
(PRE-FORM TERMINAL T-1M52-01-X & T-1M69-01-X)

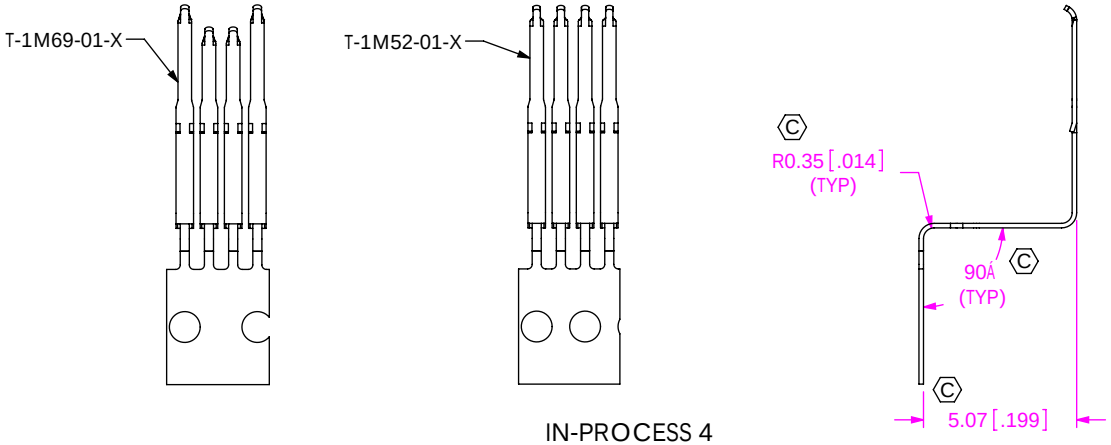

IN-PROCESS 4
(FORM TERMINAL T-1M52-01-X & T-1M69-01-X)

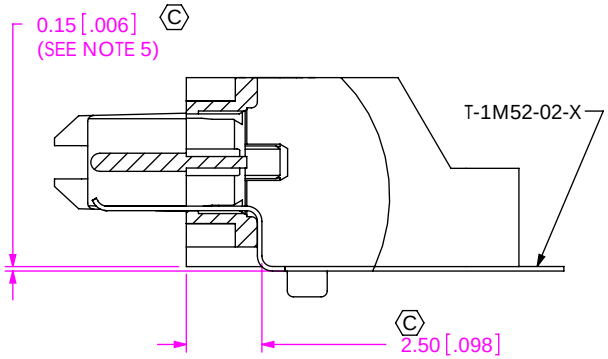

IN PROCESS 5
(FILL BOTTOM ROW)
(SEE SHEET 2 FOR MEASUREMENT DETAIL)

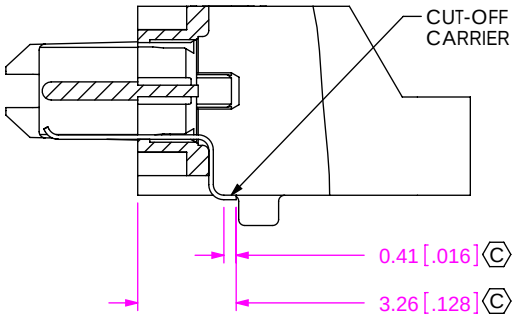

IN PROCESS 6
(CUT-OFF CARRIER)
(SEE SHEET 2 FOR MEASUREMENT DETAIL)

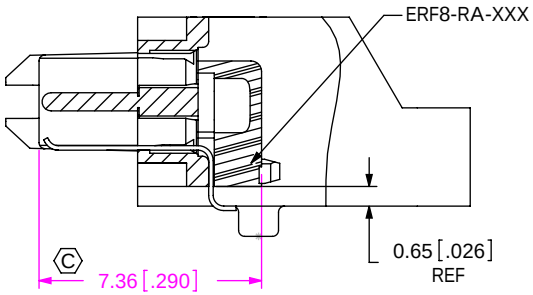

IN PROCESS 7
(FILL ERF8-RA-XXX)

c:\enterprisevault\DWG\MISC\MKTG\ERM8-XXX-01-X-D-RA-XX-TR-MKT.SLDDRW

PROPRIETARY NOTE

THIS DOCUMENT CONTAINS INFORMATION CONFIDENTIAL AND PROPRIETARY TO SAMTEC, INC. AND SHALL NOT BE REPRODUCED OR TRANSFERRED TO OTHER DOCUMENTS OR DISCLOSED TO OTHERS OR USED FOR ANY PURPOSE OTHER THAN THAT WHICH IT WAS OBTAINED WITHOUT THE EXPRESSED WRITTEN CONSENT OF SAMTEC, INC.

DO NOT SCALE DRAWING

SHEET SCALE: 4:1

samtec

520 PARK EAST BLVD, NEW ALBANY, IN 47150
PHONE: 812-944-6733 FAX: 812-948-5047
e-Mail: info@SAMTEC.com code: 55322

DESCRIPTION:
.80mm DUAL ROW RIGHT ANGLE SOCKET ASSEMBLY

DWG. NO.
ERM8-XXX-01-X-D-RA-XX-TR

BY: C. PIERCE 8/17/2007 SHEET 3 OF 5

REVISION D

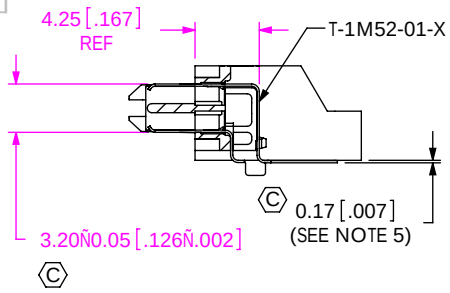

IN PROCESS 8
(FILL TOP ROW)
(SEE SHEET 2 FOR MEASUREMENT DETAIL)

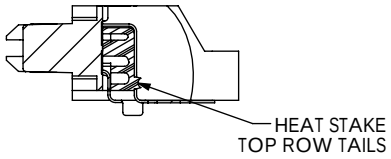

IN PROCESS 9
(HEAT STAKE TOP ROW OF CONTACTS)
(SEE SHEET 2 FOR MEASUREMENT DETAIL)

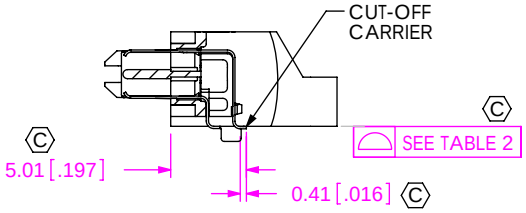

IN PROCESS 10
(CUT-OFF OF CARRIER)
(SEE SHEET 2 FOR MEASUREMENT DETAIL)

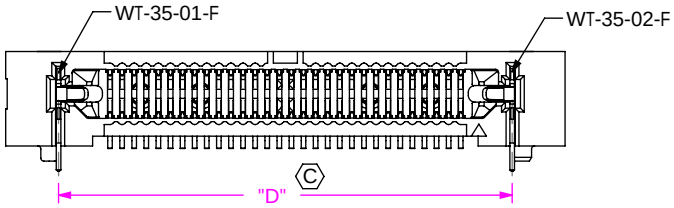

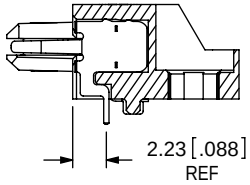

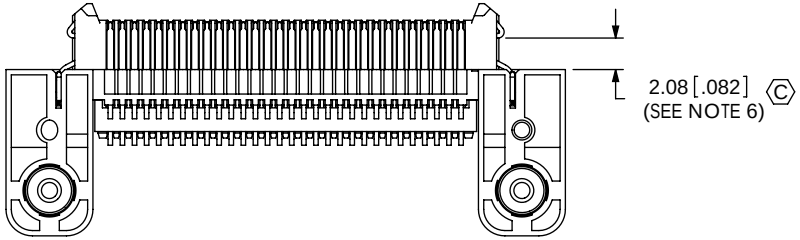

IN PROCESS 11
(FILL WT-35-XX-F)
(VERSION WITH -L OPTION)
(ERM8-030-01-S-D-RA-L SHOWN)

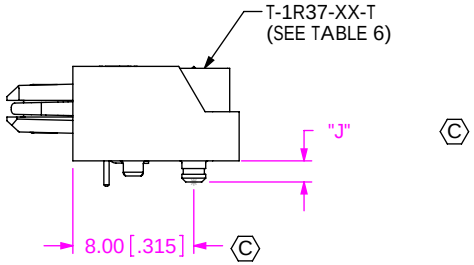

IN PROCESS 12
(FILL T-1R37-XX-T)
(SEE TABLE 6)

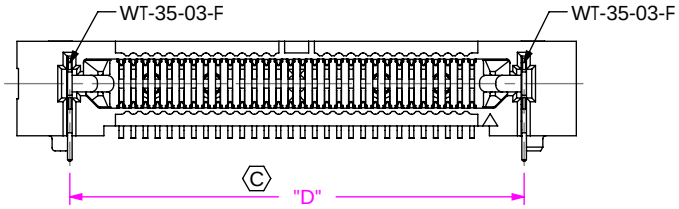

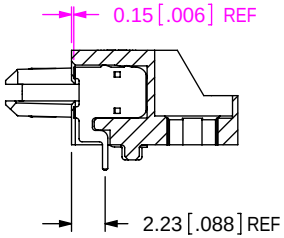

IN PROCESS 11
(FILL WT-35-03-F)
(VERSION W/O -L OPTION)
(ERM8-030-01-S-D-RA SHOWN)

c:\enterprisevault\DWG\MISC\MKTG\ERM8-XXX-01-X-D-RA-XX-TR-MKT.SLDDRW

PROPRIETARY NOTE

THIS DOCUMENT CONTAINS INFORMATION CONFIDENTIAL AND PROPRIETARY TO SAMTEC, INC. AND SHALL NOT BE REPRODUCED OR TRANSFERRED TO OTHER DOCUMENTS OR DISCLOSED TO OTHERS OR USED FOR ANY PURPOSE OTHER THAN THAT WHICH IT WAS OBTAINED WITHOUT THE EXPRESSED WRITTEN CONSENT OF SAMTEC, INC.

DO NOT SCALE DRAWING

SHEET SCALE: 2:1

samtec

520 PARK EAST BLVD, NEW ALBANY, IN 47150
PHONE: 812-944-6733 FAX: 812-948-5047
e-Mail: info@SAMTEC.com code: 55322

DESCRIPTION:
.80mm DUAL ROW RIGHT ANGLE SOCKET ASSEMBLY

DWG. NO.
ERM8-XXX-01-X-D-RA-XX-TR

BY: C. PIERCE 8/17/2007

REVISION D

TABLE 6 D						
OPTION	STYLE	BODY CALLOUT	SPACER BODY	TERMINALS	COUNTERWEIGHT	WELD TABS
NONE	-01	ERM8-XXX-01-D-RA	ERF8-RA-XX	T-1M52-01-X	T-1R37-01-X	WT-35-03-X
				T-1M52-02-X		
	* -02	ERM8-XXX-01-D-RA	ERF8-RA-XX	T-1M52-01-X	T-1R37-02-X	WT-35-06-X
				T-1M52-02-X		
-L	-01	ERM8-XXX-01-D-RA	ERF8-RA-XX	T-1M52-01-X	T-1R37-01-X	WT-35-01-X
				T-1M52-02-X		WT-35-02-X
	* -02	ERM8-XXX-01-D-RA	ERF8-RA-XX	T-1M52-01-X	T-1R37-02-X	WT-35-04-X
				T-1M52-02-X		WT-35-05-X
-DS	-01	ERM8-XXX-01-D-RA	ERF8-RA-XX	T-1M69-01-X	T-1R37-01-X	WT-35-03-X
				T-1M69-02-X		
	* -02	ERM8-XXX-01-D-RA	ERF8-RA-XX	T-1M69-01-X	T-1R37-02-X	WT-35-06-X
				T-1M69-02-X		
-DS & -L	-01	ERM8-XXX-01-D-RA	ERF8-RA-XX	T-1M69-01-X	T-1R37-01-X	WT-35-01-X
				T-1M69-02-X		WT-35-02-X
	* -02	ERM8-XXX-01-D-RA	ERF8-RA-XX	T-1M69-01-X	T-1R37-02-X	WT-35-04-X
				T-1M69-02-X		WT-35-05-X

* NOT TOOLED

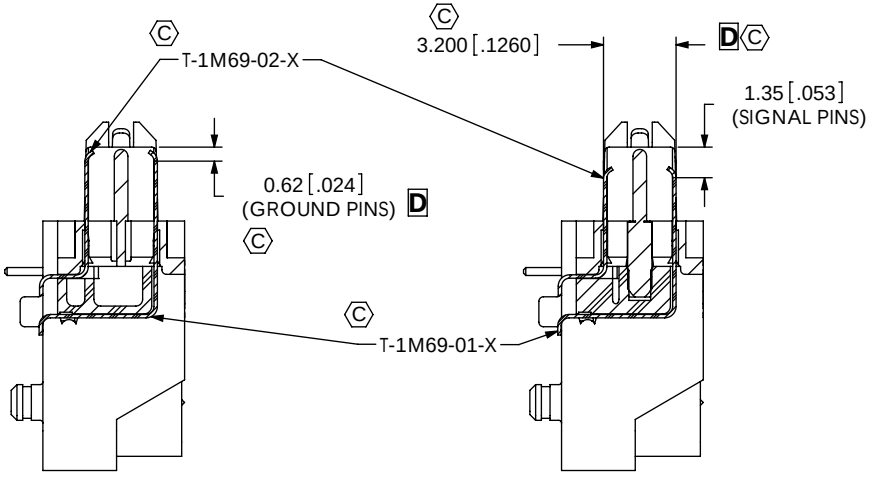

SECTION "A"-"A"
SCALE 3 : 1

SECTION "B"-"B"
SCALE 3 : 1

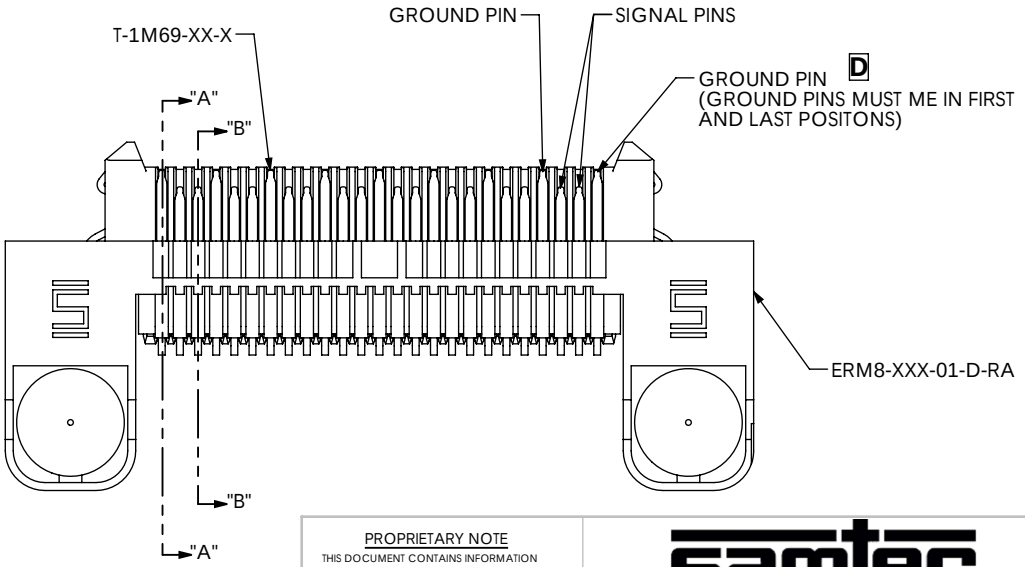

FIG. 2
ERM8-025-01-X-D-RA-DS-L SHOWN
(DIFFERENT AS SHOWN, OTHERWISE SAME AS FIG. 1)

PROPRIETARY NOTE
THIS DOCUMENT CONTAINS INFORMATION CONFIDENTIAL AND PROPRIETARY TO SAMTEC, INC. AND SHALL NOT BE REPRODUCED OR TRANSFERRED TO OTHER DOCUMENTS OR DISCLOSED TO OTHERS OR USED FOR ANY PURPOSE OTHER THAN THAT WHICH IT WAS OBTAINED WITHOUT THE EXPRESSED WRITTEN CONSENT OF SAMTEC, INC.

DO NOT SCALE DRAWING

SHEET SCALE: 2:1

samtec
520 PARK EAST BLVD, NEW ALBANY, IN 47150
PHONE: 812-944-6733 FAX: 812-948-5047
e-Mail: info@SAMTEC.com code: 55322

DESCRIPTION:
.80mm DUAL ROW RIGHT ANGLE SOCKET ASSEMBLY

DWG. NO.
ERM8-XXX-01-X-D-RA-XX-TR

BY: C. PIERCE 8/17/2007

c:\enterprisevault\DWG\MISC\MKTG\ERM8-XXX-01-X-D-RA-XX-TR-MKT.SLDDRW