Nominal diameter	Withdraw. force	Rated current	Contact resistance	Type	Part No.
4 mm	–	24 A 32 A	–	LK 415-B LK 425-B	21.2700 21.2800 (25 cm)
					21.2710 21.2810 (50 cm)
					21.2720 21.2820 (75 cm)
					21.2730 21.2830 (100 cm)
					21.2740 21.2840 (150 cm)
					21.2750 21.2850 (200 cm)

Highly flexible patch cord with 4 mm (.160 in) dia. sockets. Sockets machined brass, gold plated. PVC insulated wire 1.5 mm² and 2.5 mm² (15 and 13 AWG).

For operating temperatures, see page 27.

Components for LK 415-B:
- Socket LS 410-B ..... # 22.1012
- Insulator (polyamide) KT 415-L ..... # 22.2180
- Wire HK 1.5 PVC ..... # 22.0030

Components for LK 425-B:
- Socket LS 425-B ..... # 22.1016
- Insulator (polyamide) KT 425-B ..... # 22.2190
- Wire HK 2.5-A ..... # 22.0050

Colors: 0 - 9

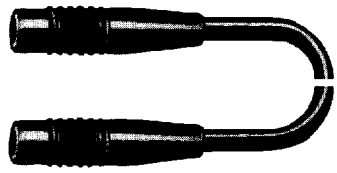

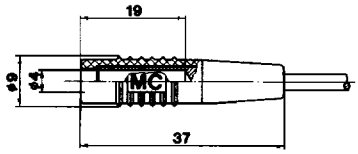

1:1.3

LS 410-B
LS 425-B

KT 415-L
KT 425-L

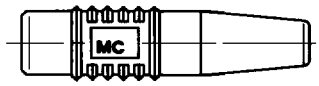

1:1

4 mm	–	32 A	0.4 mΩ	LK 425-G LK 425-G Sil	21.4100 (Sil) 21.3940 (25 cm)
					21.4110 (Sil) 21.3950 (50cm)
					21.4120 (Sil) 21.3960 (75 cm)
					21.4130 (Sil) 21.3970 (100 cm)
					21.4140 (Sil) 21.3980 (150 cm)
					21.4150 (Sil) 21.3990 (200 cm)

Highly flexible patch cord with 4 mm (.160 in) dia. MC®-Multilam™ plugs. Plugs machined brass, nickel plated and spring-loaded with nickel plated MC®-Multilam™. PVC or silicone insulated wire 2.5 mm² (13 AWG).

For operating temperatures, see page 27.

Components for LK 425-G:
- Multilam™ plug LS 425-G ..... # 22.1034
- Insulator (polyamide) KT 425-G ..... # 22.2140
- Wire HK 2.5-A PVC ..... # 22.0050

Components for LK 425-G Sil:
- Multilam™ plug LS 425-G ..... # 22.1034
- Insulator (polyamide) KT 425-G ..... # 22.2140
- Wire HK 2.5 Sil ..... # 22.0080

Colors: • PVC: 1, 2, 4, 5, 6 • Sil: 1, 2, 4, 5, 6

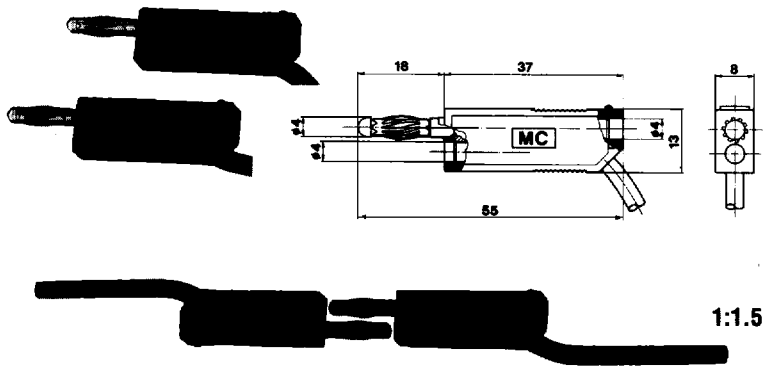

1:1.5

LS 425-G

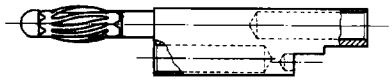

KT 425-G

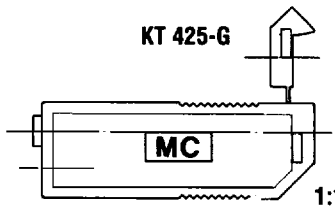

1:1

0 - green/yellow 1 - red 2 - blue 3 - white 4 - black 5 - yellow 6 - green 7 - brown 8 - grey 9 - violet