A1RFRD10

REVISION RECORD				
REV	ECO	DESCRIPTION	DRFT	CHKD
1		P/N. MODIFY	QSJ 7/19/05"	
2		MODIFY DIM	yan 08/27/05	

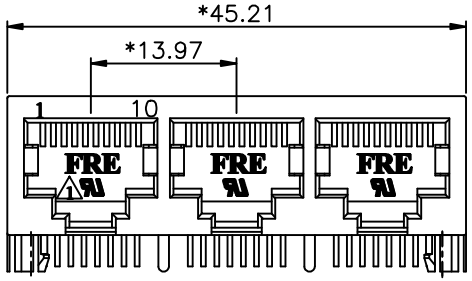

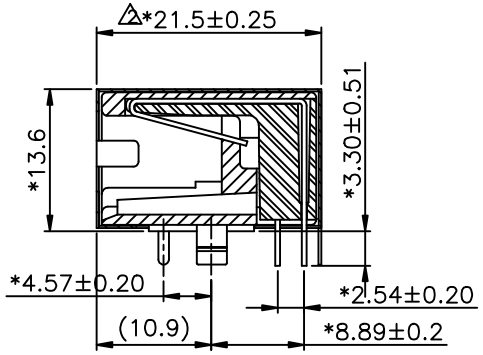

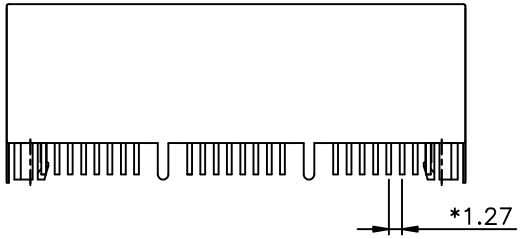

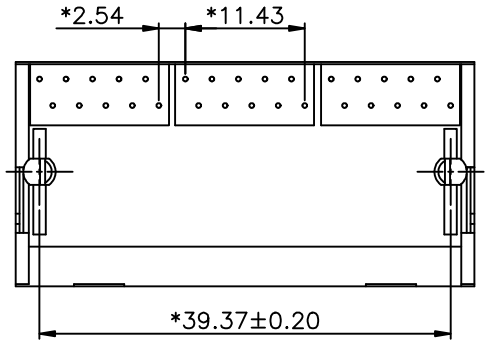

NOTES:

ELECTRICAL:

1. VOLTAGE RATING : 125 VAC RMS.
2. CURRENT RATING : 1.5 AMP.
3. CONTACT RESISTANCE : 40MILLOHMS MAX.
4. INSULATION RESISTANCE: 1000 MEGOHMS MIN @ 500 VDC.
5. DIELECTRIC STRENGTH : 1000 VAC RMS 60Hz, 1MIN.

MECHANICAL:

1. HOUSING & INSERT MATERIAL : NYLON+30%G.F UL94V-0
2. CONTACT MATERIAL : PHOSPHOR BRONZE ø0.46mm.
3. PLATING : GOLD PLATING OVER NICKEL
4. OPERATING LIFE : 750 CYCLES MIN.
5. PCB RETENTION PRE-SOLDER : 1 LB MIN.
6. PCB RETENTION POST-SOLDER: 10 LBS MIN.

ENVIRONMENTAL:

1. STORAGE : -40°C TO +85°C.
2. OPERATION: -40°C TO +85°C.
3. WAVE SOLDERING TEMPERRATURE: 255~265°C (5~10 SECONDS)

MATES WITH MODULAR PLUG CONFORMING TO FCC PART 68, SUBPART F.

LEAD FREE PART NUMBER: E590X-15B1QX-L 1

8-8C
1-10C

1- 3u" 2- 6u" 3-15u"
4-30u" 5-50u" 6-Pd20u"

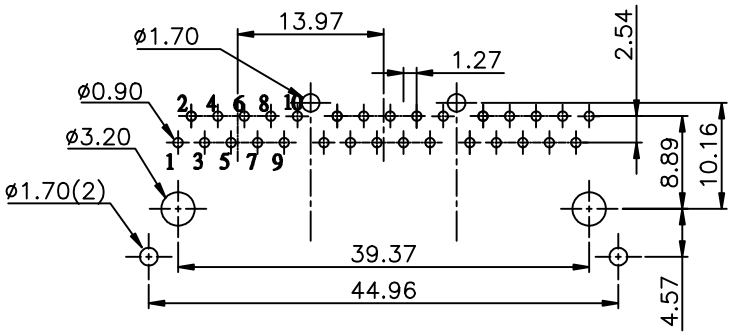

PC Board Layout Component Side Shown

MM (INCH)	DFTO QSJ	DATE 7/07/05"	FULL RISE ELECTRONIC CO., LTD
TOLERANCES EXCEPT AS NOTED	CHKD	DATE	
	MFO	DATE	
MM .0 ±0.20 ± .00 ±0.15 ± .000 ±0.075 ±	APPVL XLF	DATE 08/27/05'	TITLE 20.57 PCB JACK 10P
ANGLES ±	MATERIAL :		
	QT'Y :		DRAWING NO. GE593A10-LA / PART NO. see note
THIRD ANGLE PROJECTION	FINISH :		SIZE A3 REV 2
DETACHED LISTS	SCALE : 2;1		DO NOT SCALE DRAWING SHEET X OF Y

8 7 6 5 4 3 2 1