D1RFRD006

REVISION RECORD				
REV	ECO	DESCRIPTION	DRFT	CHKD
1		MODIFY DRAWING	ANKUE 12/14/'05	

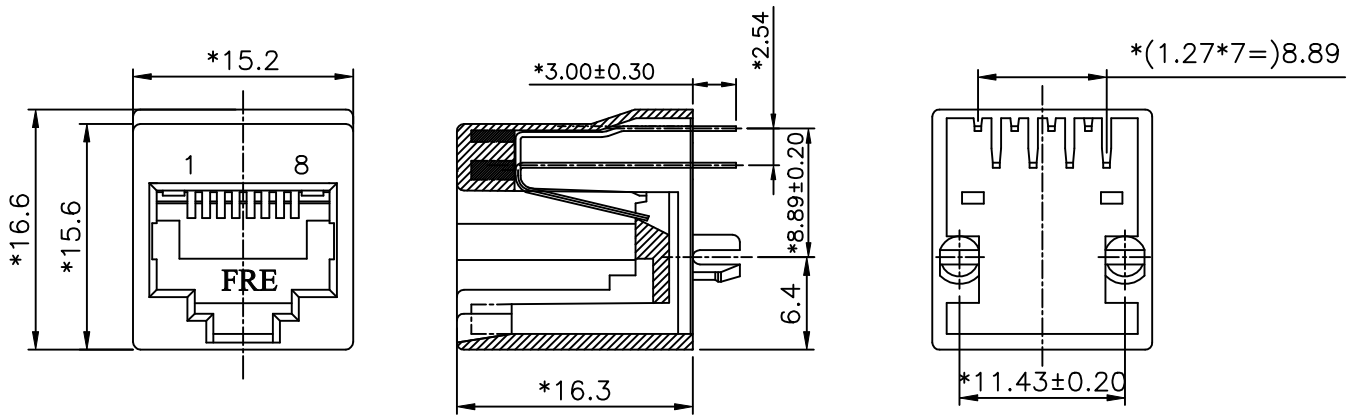

NOTES:

ELECTRICAL:

1. VOLTAGE RATING: 125 VAC RMS .
2. CURRENT RATING: 1.5 AMP .
3. CONTACT RESISTANCE: 30 MILLIOHMS MAX.
4. INSULATION RESISTANCE: 1000 MEGOHMS MIN @ 500 VDC.
5. DIELECTRIC STRENGTH: 1000 VAC RMS 60Hz, 1MIN.

MECHANICAL:

1. HOUSING MATERIAL: GLASS FILLED POLYESTER UL94V-0.
2. CONTACT MATERIAL: PHOSPHOR BRONZ t=0.35mm.
3. PLATING: GOLD PLATING OVER NICKEL.
4. OPERATING LIFE: 750 CYCLES MIN.
5. PCB RETENTION PRE-SOLDER: 1 LB MIN.
6. PCB RETENTION POST-SOLDER: 10 LBS MIN.

ENVIRONMENTAL:

1. STORAGE: -40°C TO +85°C.
2. ⚠ OPERATION: -40°C TO +85°C.
3. ⚠ WAVE SOLDER TEMPERTURE: 230°C-250°C.(5~10 SECONDS)

MATES WITH MODULAR PLUG CONFORMING TO FCC PART 68, SUBPART F.

⚠RoHS PART NUMBER: E5288-YX0XQX-L

N--W/ FRE LOGO
P--W/O LOGO

1--3U" 2--6U" 3--15U"
4--30U" 5--50U"

1--PBT+30%G.F (BLACK)
F--PBT+30%G.F (WHITE)
G--PBT+30%G.F (IVORY)
H--PBT+30%G.F (YELLOW)
S--PBT+30%G.F (CHINESE RED)

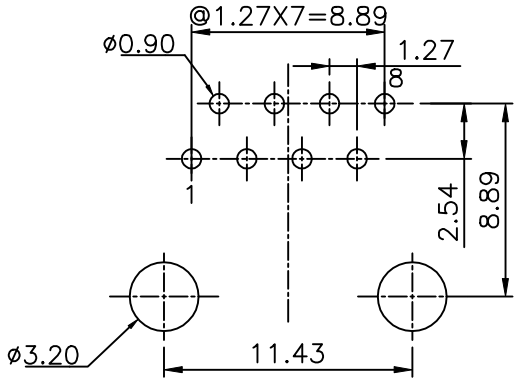

PC Board Layout
Component Side Shown

MM (INCH)	DFTO ANKUE	DATE 08/31/05	FULL RISE ELECTRONIC CO., LTD
TOLERANCES EXCEPT AS NOTED	CHKD JAMYIN	DATE 2005/12/14	
MM .0 ±0.20 ± .00 ±0.15 ± .000 ±0.075 ±	MFO	DATE	TITLE TOP ENTRY PCB JACK
	APPV LUSHENG	DATE 2005/12/14	
ANGLES ±	MATERIAL :		DRAWING NO. GE523048-LC / PART NO. SEE NOTE — SIZE A3 — REV 1
THIRD ANGLE PROJECTION	QT'Y :		
	FINISH :		
	SCALE :		DO NOT SCALE DRAWING — SHEET X OF Y

DETACHED LISTS