TAI-SAW TECHNOLOGY CO., LTD.
No. 3, Industrial 2nd Rd., Ping-Chen Industrial District,
Taoyuan, 324, Taiwan, R.O.C.
TEL: 886-3-4690038 FAX: 886-3-4697532
E-mail: tstsales@mail.taisaw.com Web: www.taisaw.com

Product Specifications Approval Sheet

Issued Date:

Product Name: SAW IF Filter 38.9 &33.9 MHz for Video Applications

TST Parts No.: TB0807A

Customer Parts No.:_____

Customer signature required

Company:_____

Division:_____

Approved by :_____

Date:_____

Checked by: Kazuma Lee

Approval by: Andrew Lee

Date: 10 / 23 / 2009

1. Customer signed back is required before TST can proceed with sample build and receive orders.
2. Orders received without customer signed back will be regarded as agreement on the specifications.
3. Any specifications changes must be approved upon by both parties and a new revision of specifications shall be released to reflect the changes.

TST DCC
Release document

TAI-SAW TECHNOLOGY CO., LTD.

No.3, Industrial 2nd Rd., Ping-Chen Industrial District, Taoyuan, Taiwan, R.O.C.
TEL : 886-3-4690038 FAX : 886-3-4697532
E-mail : tstsales@ms52.hinet.net Web: www.taisaw.com

IF SAW Filter 33.9 & 38.9 MHz for Video Applications

MODEL NO.: TB0807A

REV. NO.:1

A. FEATURES:

1.IF Filter for Video Applications

RoHS Compliant
Lead free
Lead-free soldering

B. MAXIMUM RATING:

Operating Temperature Range	T_A	-25~65	℃	
Storage Temperature Range	T_{stg}	-40~85	℃	
DC voltage	V_{DC}	12	V	Between any terminals
AC voltage	V_{PP}	10	V	Between any terminals

C. ELECTRICAL CHARACTERISTICS:

Reference temperature: Ta=25℃

Terminating source impedance Z_S=50Ω

Terminating load impedance Z_L=2kΩ//3 pF

FREQUENCY(MHz)		VALUE			unit
		Min	Typ.	Max.	
Insertion attenuation	37.40 MHz	-	15.5	17.5	dB
Reference Frequency	37.40 MHz	-	0	-	-
Picture carrier	38.90 MHz	3.5	5.0	6.5	dB
	33.90MHz	5.5	8.0	10.5	dB
Color carrier	34.47 MHz	0.0	1.5	3.0	dB
Sound carrier	32.40 MHz	40.0	50.0	-	dB
	32.90 MHz	38.0	48.0	-	dB
Adjacent picture carrier	30.90 MHz	42.0	52.0	-	dB
	31.90 MHz	42.0	52.0	-	dB
Adjacent sound carrier	40.40 MHz	42.0	50.0	-	dB
	40.90 MHz	40.0	48.0	-	dB
Lower sidelobe:	25.00-31.90 MHz	38.0	45.0	-	dB
Upper sidelobe:	40.40-45.00 MHz	37.0	42.0	-	dB
Reflected wave signal suppression		42.0	50.0	-	dB
Feedthrough signal suppression		50.0	56.0	-	dB
Group delay ripple (p-p)		-	50	-	ns
Temperature coefficient	TC	-	-72	-	ppm/K

D.FREQUENCY CHARACTERISTICS:

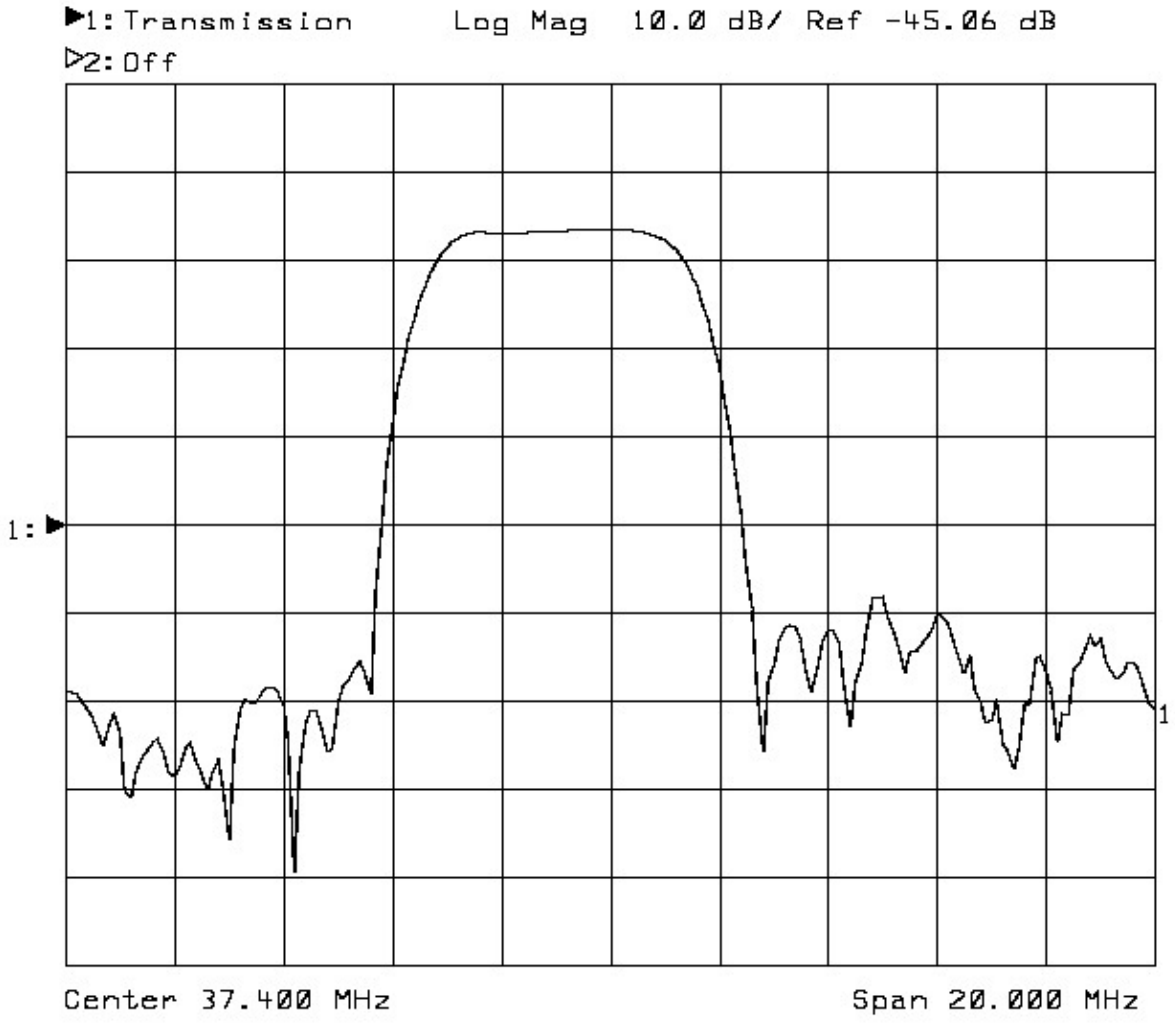

E.TEST CIRCUIT

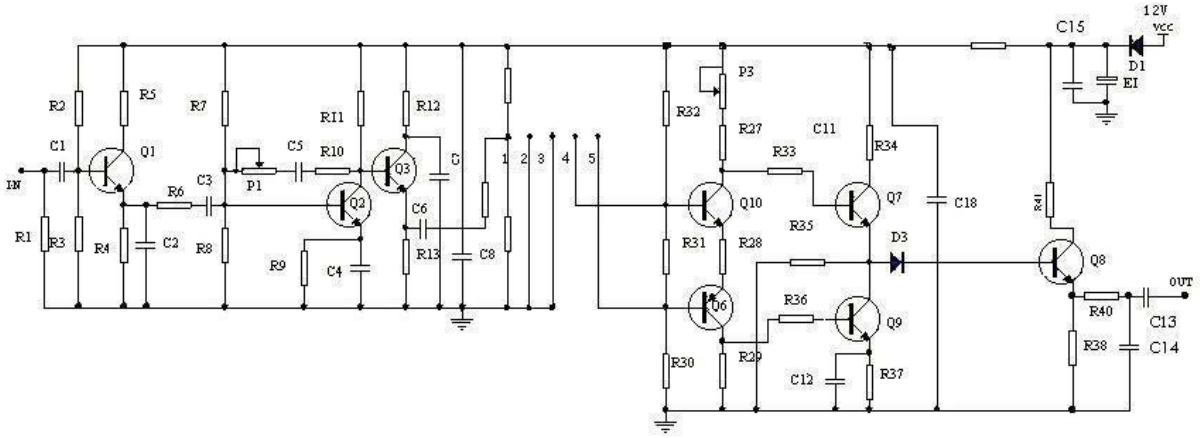

E. Outline Drawing:

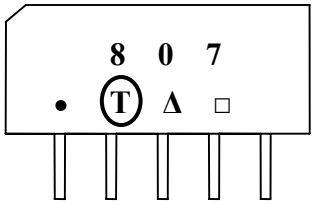

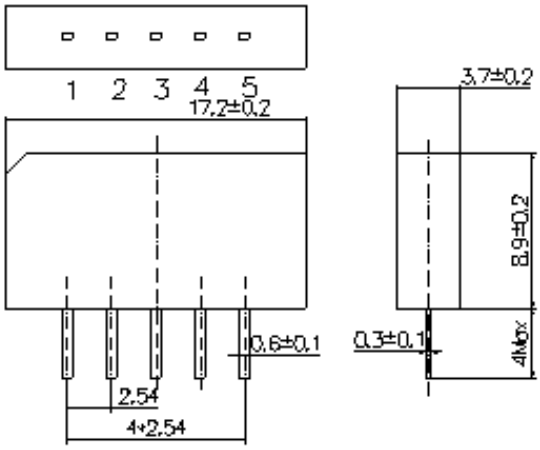

Pin No.	Functions
1.	Input
2.	Input - ground
3.	Chip carrier - ground
4.	Output
5.	Output

□ : Week Code (Follow the table from planner each year)

△ : Product / Year Code

Year	2005 2009	2006 2010	2007 2011	2008 2012
Product Code	B	b	B	b