E8410A

1GHz Dual Channel, Digitally Programmed Pin Electronics Solution

TEST AND MEASUREMENT PRODUCTS **PRELIMINARY**

Description

The E8410A has a Driver and Window Comparator receiver for each channel. Also present is a PMU per channel that also doubles as a resistive load function to the DUT. Each PMU has a 16-bit ADC for analog parametric measurements.

All level's DACs for the Driver, Receiver and PMU are on-chip and are programmed via a high speed serial bus. Each of the level's DACs have offset and gain registers for on-chip calibrations.

The Driver circuit is capable of forcing two levels to the DUT (DVH and DVL) as well as a third voltage for a termination level (DVT) to terminate high-speed DUT signals to the Comparator receivers into a high quality 50Ω load. The Driver can also be configured to a high impedance (HiZ) state for an open termination of DUT signals.

Waveform clamps are also available to clip the input signals from a DUT when not using the Driver as a termination. The clamps prevent reflections from returning to the DUT transmission line which can create timing errors and false triggering.

All of the on-chip DAC levels and configuration registers for each channel may be programmed via SET commands. This PinCast method of programming allows all channels in a system to be programmed concurrently with a simple set command whereby any pin channel that had been assigned to that set will respond.

The two driver circuits may be placed into a differential drive mode. This reduces driver-to-driver skews to levels difficult to achieve by external deskewing. The two window comparators may also be placed into a differential receive mode. These features enable higher quality testing of differential signals to/from the DUT.

Applications

- Logic Testers
- Mixed-Signal Test Equipment
- Memory Testers
- Flash Memory Testers
- ASIC Verifiers

SPI and QSPI and trademarks of Motorola, Inc.
MICROWIRE is a trademark of National Semiconductor Corp.

Features

- Two Fully Integrated Pin Channels including:
  - 16-bit DACs for each level
  - Tri-level Driver
  - Window Receiver
  - Parametric Measurement Unit
  - Thevinen Load
  - Waveform Clamps
  - 16-bit ADC for PMU measurements
- Driver, Comparator and PMU maximum 8V span over -2 to +7V range
- Configurable Output Protection
- 4 PMU current ranges; 24mA, 2.4mA, 240µA, 24µA
- On-Chip ADC for each PMU
- 50MHz Serial Bus Programming
  - SPI™/QSPI™/ MICROWIRE™
  - Daisy-chainable
- Power Dissipation
  ~1.4W/Channel, quiescent (I/O mode)
- Pin and Software Compatible to E8400, E8405, E8415
- Differential Drive and Receive Functionality
- Optimal Small Swing Performance
- Small 11mm x 11mm Package
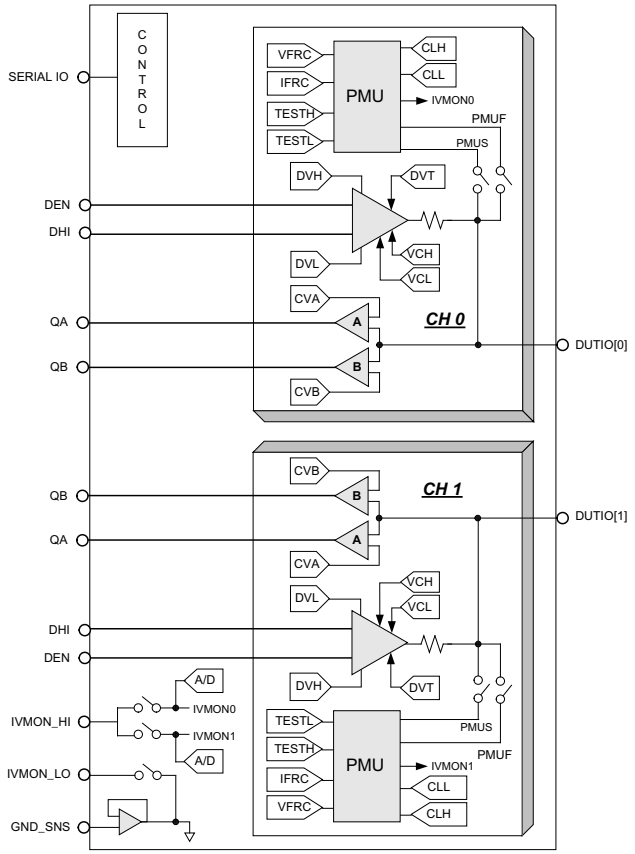
Functional Block Diagram