FUJI ELECTRIC

Z SERIES MICRO CONTROLLER E —48 × 48mm—

DATA SHEET PYZ4

Micro Controller E is a small, economical temperature controller having a built-in micro-processor, and measures only 48mm square in accordance with DIN standard.

It accepts input from thermocouples, resistance bulbs, and voltage/current, and incorporates numerous control functions for on- off control and PID control.

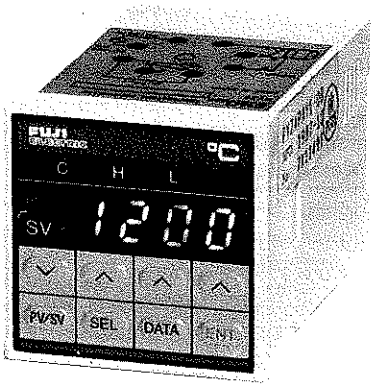

FEATURES

1. **Multiple input, easily programmable range**
   The micro controller E accepts inputs from 6 different types of thermocouples and resistance bulbs. Alterations of input range can readily be made at the site. Voltage/current input type is also available.
2. **Wide range of power supply**
   The micro controller E operates on AC voltage ranging from 85 to 265V.
3. **Standard type with PID auto-tuning function**
   Auto-tuning function is provided to obtain PID parameters suited for process.
4. **Dust/drip-proof front panel**
   Front panel is dust/drip-proof complying with IEC IP55.
5. **Compactness**
   Instrument depth is only 100mm or less, allowing installation in a limited space.

SPECIFICATIONS

1. Control functions

(1)PID control: Proportional band (P): 0 to 999.9%
Integral time (I): 0 to 9999 sec
Derivative time (D): 0 to 3600 sec
(2-position action at P, I, D=0, proportional action at I, D=0)

(2)PID auto-tuning

(3)Proportional cycle:
1 to 150 sec (contact; SSR / SSC drive output)

(4)Hysteresis width:
0 to 20% (2-position action)

(5)Anti-reset windup :
0 to 100% variable

(6)Control cycle: 0.5 sec

2. Input

(1)PV input signal:

Type	Input		Remarks
I	Thermocouple input	J K R T N (Nichrosil-Nisil) PL-II (Platinel)	• Cold junction compensating function built in • Burnout circuit built in • Influence of external wiring resistance is approx. 0.5μV/Ω
	Resistance bulb input	Pt100 (IEC Pub 751-1983)	• Burnout circuit built in • Influence of external wiring resistance is 0.015% /Ω (per wire) of reading
II	Voltage input	1 to 5V DC	Input resistance, 400kΩ
	Current input	4 to 20mA DC	Input resistance, 250Ω

Remarks:
(1) Selection between thermocouple input and resistance bulb input in Type I is made by using the select pin in the instrument.
(2) For 4 to 20mA DC input in Type II, a 250Ω resistor is supplied for connection to the input terminal.
(3) For selection between 4 to 20mA and 1 to 5V DC, remove the 250Ω resistor.
(4) Instrument using B, E and S thermocouple inputs is also available as non-standard item.

(2) Input range ( ): Decimal point acceptable range

Input	°C		°F	
	Range	Min. range	Range	Min. range
Pt100	–150 to 400 (–150.0 to 300.0)	50 (100.0)	–238 to 752	90
J	0 to 1000 (0.0 to 300.0)	200	32 to 1832	360
K	0 to 1200 (0.0 to 300.0)	200	32 to 2192	360
R	0 to 1600	1000	32 to 2912	1800
T	–200 to 400 (–200.0 to 300.0)	200	–328 to 752	360
N (Nichrosil-Nisil)	0 to 1300 (0.0 to 300.0)	200	32 to 2372	360
PL-II (Platinel)	0 to 1300 (0.0 to 300.0)	200	32 to 2372	360
4 to 20mA DC	–1999 to 3000 (engineering value seting)			
1 to 5V DC	Decimal point acceptable optionary			

(3) Burnout

Control output is held at upper/lower maximum value when temperature sensor open.
For resistance bulb input, detection is allowed even if any of the three wires is discontinued.

3. Output

Control output signal:

Output selectable from the following

Current output	4 to 20mA DC	Allowable load resistance 600Ω max. Ripple approx. 1.5%FS(*), 2Hz
Contact output	SPDT contact	Electrical expect life 220V AC, 3A, resistive load 10^5 cycle Mechanical expect. life 10^7 cycle
SSR / SSC driver output	Transistor	ON 60mA max. / 24V DC OFF 0.3V max.

4. Setting and indication

(1) Accuracy: ±0.5%FS ±1 digit
±5%FS ±1 digit
(R thermocouple 0 to 400°C)

(2) Setting method:
Key operation

(3) Indication method:
Numerical indication; PV/SV changeover indication (red), 7-segment LED, 4 digits

(4) Status indication:
Control output
High/low alarm (option)

5. Alarm (option)

(1) High/low alarm:
One type of alarm can be selected from those in Fig. 1 by using the front panel key.

Alarm output: High/low common alarm

Relay contact output	SPST contact	Resistive load; 220V AC, 1A

Note: * FS: Full scale

6. Power failure processing

Set values, PID parameters are retained in nonvoratile memory and restarts automatically.

7. Self-diagnosis function

Monitoring of program failure by watchdog timer

8. Operating and storage condition

(1) Ambient temperature:
–10 to +50°C

(2) Ambient humidity:
90%RH or less (no condensation is required)

(3) Storage temperature:
–20 to +60°C

9. General specifications

(1) Power supply: 85 to 265V AC, Free power supply

(2) Power consumption:
Approx. 10VA/100V AC, approx. 18VA/220V AC

(3) Dielectric strength:
1500V AC (power supply to relay output, power supply to alarm output)
500V AC (other)

(4) Insulation resistance:
50MΩ or more (500V DC)

10. Structure

(1) Mounting method:
Panel flush mounting or wall mounting

(2) Enclosure: Plastic housing

(3) Terminal configuration:
Socket type

(4) External dimensions:
48 (H) x 48 (W) x 93 (D) mm

(5) Mass(weight): Approx. 150g

(6) Finish color: Munsell 5Y 8/1 (front panel frame and case)

11. Scope of delivery

Controller, panel mounting frame, socket when specified

CODE SYMBOLS

1	2	3	4	5	6	7	8	9	10
P	Y	Z	4			Y	2	-	V

	Description
	Input signal
T	Thermocouple [°C]
R	Thermocouple [°F]
N	Resistance bulb, Pt100Ω, 3-wire (IEC) [°C]
S	Resistance bulb, Pt100Ω, 3-wire (IEC) [°F]
B	4 to 20mA DC
A	1 to 5V DC
	Control output
A	Contact (reverse action)
B	Contact (direct action)
C	SSR / SSC driver output (reverse action)
D	SSR / SSC driver output (direct action)
E	4 to 20mA DC (reverse action)
F	4 to 20mA DC (direct action)
	Additional functions
0	None
1	With high/low common alarm

Notes:Symbols of resistance bulbs are as follows.
Pt100... IEC Pub 751-1983
(Pt100 changeover is possible with front key.)

Note: Socket is needed to order by the parts number showing under.

Mounting socket ordering

Code	Type	Mounting	Application
A	ATX2PSB	Panel flush mounting	For non alarm type
B	ATX1NS (US socket)		
C	TP28S	Wall mounting	
D	TP28X	Rail mounting	
E	TP311SB	Panel flush mounting	For alarm type
F	11GB		
G	TP311S	Wall mounting	
H	TK7A5807P9	Rail mounting	

Fig. 1 Kinds of alarms:

	Function	Action
Deviation alarm	High/low alarm, without low alarm hold	AL SV AH
	High alarm	SV AH
	Low alarm, without low alarm hold	AL SV
	High/low alarm, with low alarm hold	AL SV AH
	Low alarm, with low alarm hold	AL SV
Absolute value alarm	High/low alarm, without low alarm hold	AL AH
	High alarm	AH
	Low alarm, without low alarm hold	AL
	High/low alarm, with low alarm hold	AL AH
	Low alarm, with low alarm hold	AL

	Function		Action
Absolute value + Deviation alarm	Absolute value	Deviation	
	High alarm	Low alarm	AL SV AH
	Low alarm	High alarm	AL SV AH
	Low alarm, with hold	High alarm	AL SV AH
	High alarm	Low alarm, with hold	AL SV AH
Zone of alarm	Low alarm	High alarm	
	Absolute value	Absolute value	AL AH
	Deviation	Absolute value	AL SV AH
	Absolute value	Deviation	AL SV AH
	Deviation	Deviation	AL SV AH

Remarks: (1) Low alarm hold is a function to turn OFF the lower limit alarm when temperature is below the set value at ON of instrument power source, and when the temperature rises above the set value of AL and then lower again, the lower limit alarm is turned ON.
(2) Alarm output in the shaded area ▨ turns ON.
(3) Only one alarm output is provided, either high or low.
(4) Alarm type at shipping is deviation high/low alarm with low alarm hold in the ▭ area.

Parameter function

- This instrument incorporates primary (setpoint) and secondary (system) parameters so that setting operation can be made by using the front panel keys according to operating conditions. (By pressing the SEL key for about 5 seconds, secondary parameter is selected. By pressing the same key for about 5 seconds again, primary parameter is selected.)
- When the instrument is left as it is for about 30 seconds following key operation, the parameter display automatically turns to PV display.

• Primary (setpoint) menu

Display	Item	Description
SV	Main setpoint	Settable within the input range
P	Proportional band	Setting range: 0.0 to 999.9% For on/off control set to "0"
I	Integral time (reset)	Setting range: 0 to 9999 sec. Integral action is off when set to "0"
D	Derivative time (rate)	Setting range: 0 to 3600 sec. Derivative action is off when set to "0"
AL(*1)	Low alarm setpoint	Settable within the input range Not indicated without the alarm output option
AH(*1)	High alarm setpoint	Settable within the input range Not indicated without the alarm output option
TC	Cycle time (output 1)	Setting range: 1 to 150 sec. Not indicated within current output
HYS	Hysteresis (output 1)	Setting range: 0.0 to 20.0% FS
AT	Auto-tuning	Sets P,I,D parameters internally (Reverse or direct) 0: Auto-tuning off 1: Standard auto-tuning 2: Below setpoint auto-tuning (10%FS below setpoint)
LOC	Lock-up	Program data lock-up: (code) 0: All data is selectable 1: All data is locked-up 2: All data except for main setpoint is locked-up

Note: *1 is displayed only when the controller is provided with alarm function.

• Secondary (system) menu

Display	Item	Description
P-n1	Control action	Setting control action: (code) Reverse or direct Setting sensor break protection: (code) Upscale or downscale
P-n2	Input type	Setting input type: Thermocouple or RTD Current or voltage
P-dF	Digital filter	Setting: (code) 0 to 201 1/2 of setting=63% response time
P-SL	Low limit of input range	Set the lower limit of input range Setting range : −1999 to 3000
P-SU	High limit of input range	Set the higher limit of input range Setting range : −1999 to 3000
P-Ab	Alarm type	Setting: (code) Choices of deviation, absolute, and combination type alarm configurations
P-An	Alarm hysteresis	Setting range: 0 to 255 (engineering unit)
P-dP	Decimal point position (resolution)	Select the decimal point position for PV/SV indication No decimal point ➡ "0" One decimal point ➡ "2" Two decimal point ➡ "4" Three decimal point ➡ "8"
P-48		Not to be changed.
PVOF	Process variable offset	Setting range: −1999 to 2000 Indicated process variable is changed Measured process variable is unchanged
SVOF	Setpoint variable offset	Setting range: − 1999 to 2000 Indicated setpoint variable is unchanged Measured setpoint variable is changed
P-F	C/F selection	Setting: (code) 0: °C 1: °F
dSP1	Primary parameter skip	Setting of presence or absence of any parameter display P, I, D, AL, AH, TC or HYS.
dSP2	Primary parameter skip	Setting of presence or absence of any parameter display AT.
dSP3	Primary parameter skip	Not to be changed.

Functions

(1) Auto-tuning

PID parameters are automatically set by controller's measurement and operation function.

This instrument provides 2 types of auto-tuning functions; the standard type (auto-tuning, with SV used as reference) and the low SV type (auto-tuning, with the value 10% below SV used as reference).

(a) Standard type

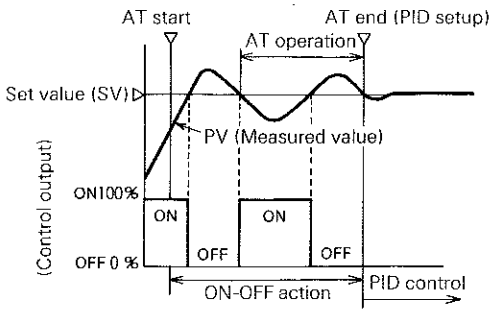

(b) Low PV type

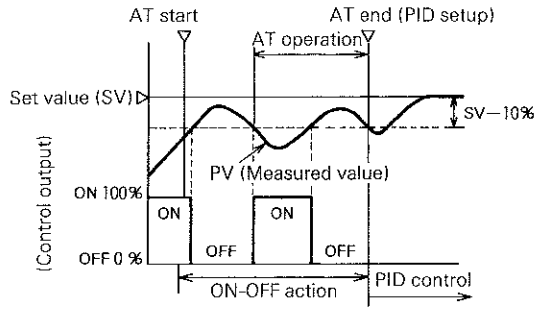

Remarks: (1) PID parameter which has been automatically set at the completion of auto-tuning is saved even when the power is turned OFF, eliminating the need for auto-tuning for succeeding operations.
(2) During auto-tuning, control output turns ON and OFF, which largely changes the value of PV depending on process. Do not use the auto-tuning function if such a phenomenon is not allowed.
(3) Do not use the auto-tuning function for a process having a quick response, such as pressure control, flow control, etc.

(2) Fault display

This instrument provides fault display functions.

Display	Cause
U U U U	(1) Thermocouple sensor burnout (when burnout direction is up scale) (2) Resistance bulb sensor burnout (when burnout direction is up scale) (3) PV display value in excess of 30% above the max. value in measurement range
L L L L	(1) Thermocouple sensor burnout (when burnout direction is down scale) (2) Resistance bulb sensor burnout (when burnout direction is down scale) (3) Resistance bulb sensor short-circuit (between A and B) (4) PV display value declined 30% below the min. value in measurement range

Note: The above display may not be obtained depending on input type and input range.

OUTLINE DIAGRAM (Unit: mm)

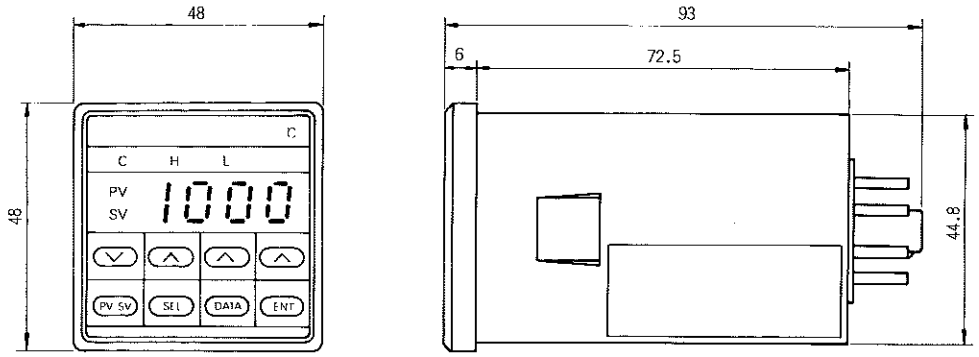

Panel fixing frame (inserted from rear of instrument and fixed with screws)

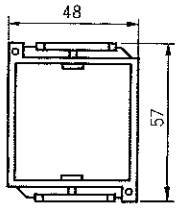

Panel cutout

Mounting of "n" units

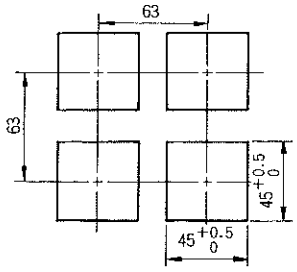

Mounting multiple "n" units (2≤n≤6) (not available when 11-pin TP311SB socket is used for horizontal mounting and available when ATX1NS and 11GB socket is used for vertical mounting.)

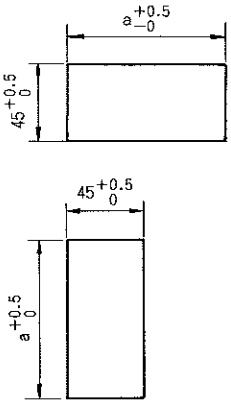

Quantity	2	3	4	5	6
a	93	141	189	237	285

Note: For close mounting of instruments with 200V system power source, it is recommended to install a cooling fan for dissipating heat.

CONNECTION DIAGRAM (Without alarm)

— Socket type —
(8-pin)

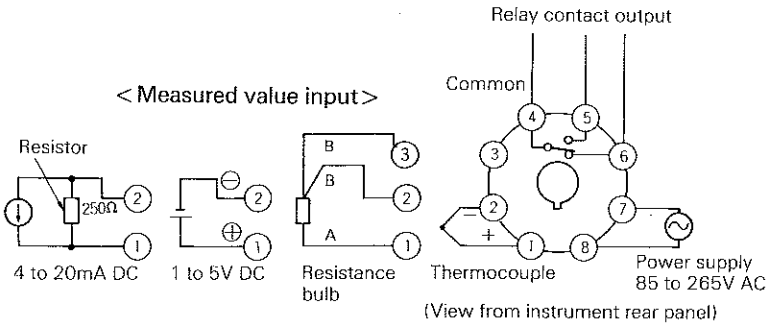

< Control output >

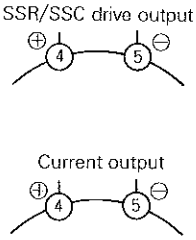

Remark: SSR/SSC drive output and 4 to 20mA DC output are not electrically isolated from the internal circuit. Use a non-grounded type sensor.

Usable socket (Unit: mm)

ATX1NS type
(US socket)

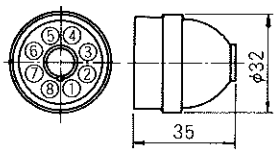

TP28S type
(for front panel screw terminal wiring)

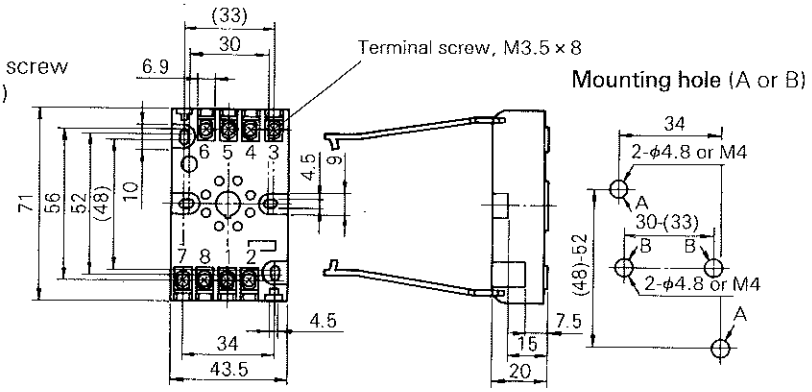

TP28X type
(for rail mounting screw terminal wiring)

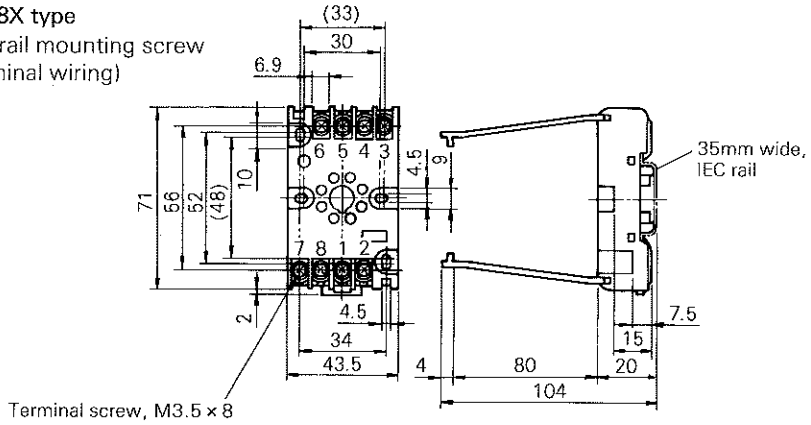

ATX2PSB type
(for rear panel screw terminal wiring)

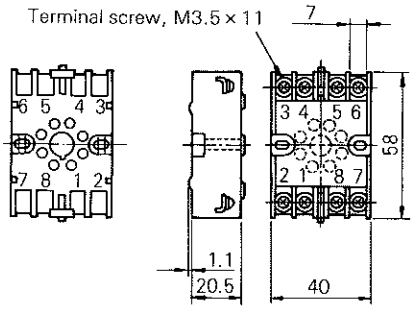

CONNECTION DIAGRAM (With alarm)

— Socket type —
(11-pin)

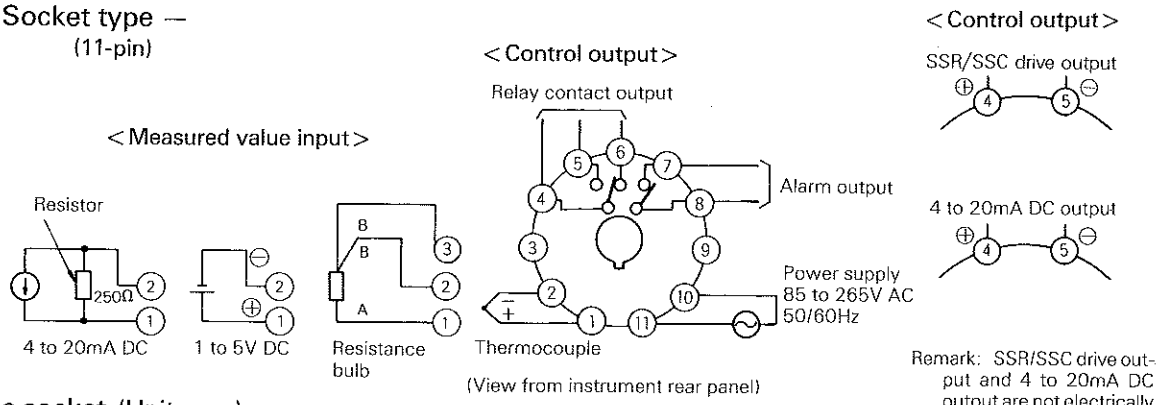

Remark: SSR/SSC drive output and 4 to 20mA DC output are not electrically isolated from the internal circuit. Be sure to use non-grounded type sensor.

Usable socket (Unit: mm)

11GB socket

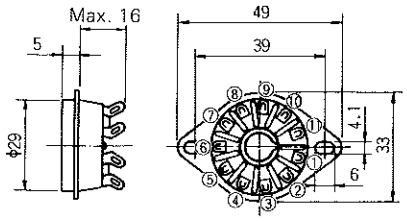

TK7A5807P9
(for rail mounting screw terminal wiring)

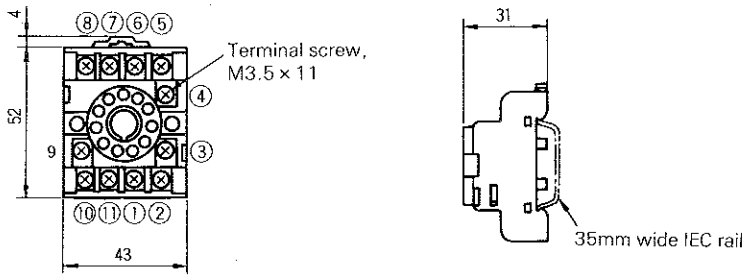

TP311SB
(for rear panel screw terminal wiring)

Panel mounting size is the same as that for TP311S.

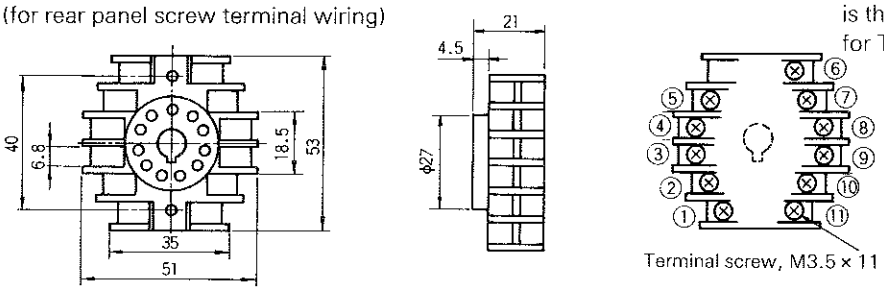

(Rear panel)

Fuji Electric Co.,Ltd.

Head office
12-1 Yurakucho 1-chome, Chiyoda-ku, Tokyo, 100 Japan
Phone: Tokyo 3211-7111
Telex: J22331 FUJIELEA or FUJIELEB

Instrumentation System Div.
No.1, Fuji-machi, Hino-city, Tokyo 191 Japan
Phone: 0425-85-6200
Fax: 0425-85-6188

Printed in Japan 1995-9/50E