LG3202405-DW 5.7", 320 x 240 dots + white led backlight with dc-dc converter

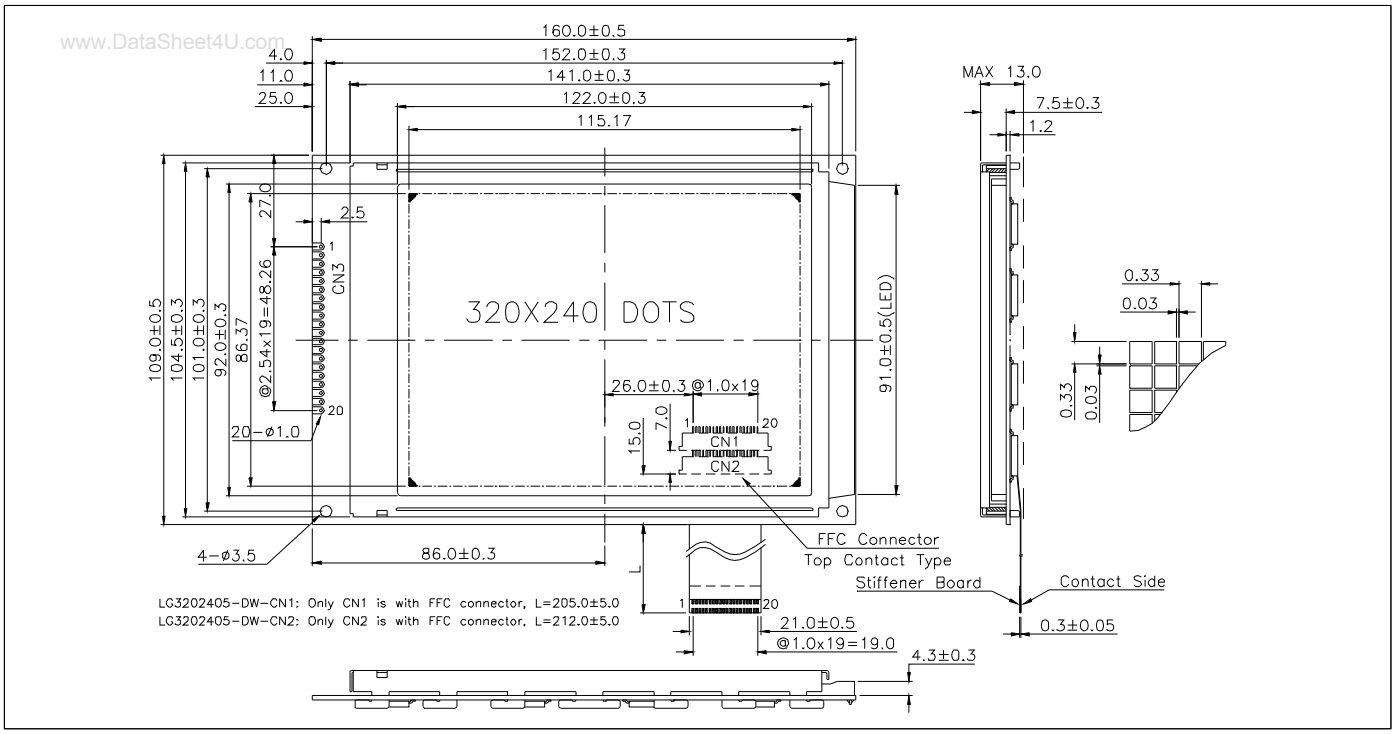

ABSOLUTE MAXIMUM RATINGS

Item	Symbol	Min.	Max.	Unit
Supply Voltage(Logic)	V_{DD} - V_{SS}	-0.3	7.0	V
Supply Voltage(LCD)	V_{DD} - V_O	-0.3	30.0	V
Input Voltage	V_I	-0.3	V_{DD} + 0.3	V
Operating Temp.	T_{opr}	-20	70	°C
Storage Temp.	T_{stg}	-30	80	°C

MECHANICAL DATA

Item	Nominal Dimensions	Unit
Module Size (W x H x T)	160.0 x 109.0 x 13.0	mm
Viewing Area (W x H)	122.0 x 92.0	mm
Dot Pitch (W x H)	0.36 x 0.36	mm
Dot Size (W x H)	0.33 x 0.33	mm
Weight	Approx. 220	g

ELECTRICAL CHARACTERISTICS (V_{DD}=5V±0.25V)

Item	Symbol	Test Condition	Min.	Typ.	Max.	Unit
Input High Voltage	V_{IH}	--	0.5V_{DD}	--	V_{DD}	V
Input Low Voltage	V_{IL}	--	0	--	0.2V_{DD}	V
Supply Current	I_{DD}	V_{DD} = 5.0V	--	35.0	60.0	mA
LCD Driving Voltage	V_{DD} - V_O	Ta=25°C	--	22.6	--	V

PIN CONNECTIONS (CN1/CN2/CN3)

Pin No. CN2 CN3	Pin No. CN1	Symbol	Level	Function
1	15	VSS	0V	GND
2	14	VDD	3.3~5V	Power supply for logic
3	17	VO	--	Operating voltage for LCD
4	5	A0	H/L	Data type selection
5	3	/WR(R/W)	H/L	/WR for 80 MPU, R/W for 68 MPU
6	2	/RD(E)	H/L	/RD for 80 MPU, E for 68 MPU
7	6	DB0	H/L	Data bus line
8	7	DB1	H/L	
9	8	DB2	H/L	
10	9	DB3	H/L	
11	10	DB4	H/L	
12	11	DB5	H/L	
13	12	DB6	H/L	
14	13	DB7	H/L	
15	4	/CS	L	Chip enable singal, active "L"
16	1	/RST	L	Reset signal, active "L"
17	16	VOUT	-21.5V	Output voltage for LCD driving
18	18	SEL1	H/L	L: 8080 MPU H: 6800 MPU
19	19	LEDA	+5V	Power supply for LED backlight
20	20	LEDK	0V	

BLOCK DIAGRAM

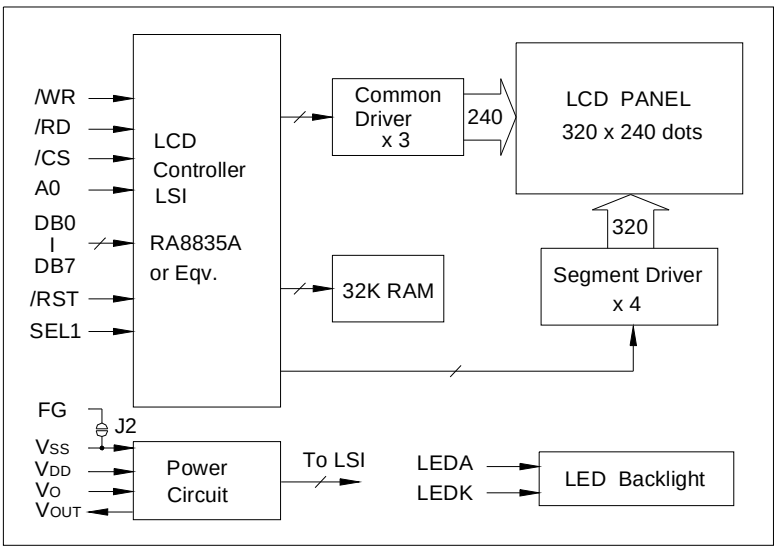

LED BACKLIGHT SPECIFICATIONS (Ta=25°C)

Item	Symbol	Typ.	Max.	Unit
Forward Voltage	V_f	3.1	3.3	V
Forward Current	I_f	150	--	mA
LED Color		White		

www.DataSheet4U.com