MEMORY

CMOS 4M × 4 BIT
HYPER PAGE MODE DYNAMIC RAM

MB8117405A-60/-70

CMOS 4,194,304 × 4 BIT Hyper Page Mode Dynamic RAM

■ DESCRIPTION

The Fujitsu MB8117405A is a fully decoded CMOS Dynamic RAM (DRAM) that contains 16,777,216 memory cells accessible in 4-bit increments. The MB8117405A features a “hyper page” mode of operation whereby high-speed random access of up to 1,024-bits of data within the same row can be selected. The MB8117405A DRAM is ideally suited for mainframe, buffers, hand-held computers video imaging equipment, and other memory applications where very low power dissipation and high bandwidth are basic requirements of the design. Since the standby current of the MB8117405A is very small, the device can be used as a non-volatile memory in equipment that uses batteries for primary and/or auxiliary power.

The MB8117405A is fabricated using silicon gate CMOS and Fujitsu’s advanced four-layer polysilicon and two-layer aluminum process. This process, coupled with advanced stacked capacitor memory cells, reduces the possibility of soft errors and extends the time interval between memory refreshes. Clock timing requirements for the MB8117405A are not critical and all inputs are TTL compatible.

■ PRODUCT LINE & FEATURES

Parameter		MB8117405A-60	MB8117405A-70
$\overline{RAS}$ Access Time		60 ns max.	70 ns max.
Randam Cycle Time		104 ns min.	124 ns min.
Address Access Time		30 ns max.	35 ns max.
$\overline{CAS}$ Access Time		15 ns max.	17 ns max.
Hyper Page Mode Cycle Time		25 ns min.	30 ns min.
Low Power Dissipation	Operating current	577.5 mW max.	495 mW max.
	Standby current	11 mW max. (TTL level)/5.5 mW max. (CMOS level)	

- 4,194,304 words × 4 bit organization
- Silicon gate, CMOS, Advanced Capacitor Cell
- All input and output are TTL compatible
- 2048 refresh cycles every 32.8ms
- Early Write or $\overline{OE}$ controlled write capability
- $\overline{RAS}$ only, $\overline{CAS}$-before-$\overline{RAS}$, or Hidden Refresh
- Hyper Page Mode, Read-Modify-Write capability
- On chip substrate bias generator for high performance

This device contains circuitry to protect the inputs against damage due to high static voltages or electric fields. However, it is advised that normal precautions be taken to avoid application of any voltage higher than maximum rated voltages to this high impedance circuit.

■ ABSOLUTE MAXIMUM RATINGS (See NOTE.)

Parameter	Symbol	Value	Unit
Voltage at any pin relative to V_{SS}	V_{IN}, V_{OUT}	–0.5 to +7	V
Voltage of V_{CC} supply relative to V_{SS}	V_{CC}	–0.5 to +7	V
Power Dissipation	P_D	1.0	W
Short Circuit Output Current	I_{OUT}	–50 to +50	mA
Operating Temperature	T_{OPE}	0 to +70	°C
Storage Temperature	T_{STG}	–55 to +125	°C

NOTE: Permanent device damage may occur if the above **Absolute Maximum Ratings** are exceeded. Functional operation should be restricted to the conditions as detailed in the operational sections of this data sheet. Exposure to absolute maximum rating conditions for extended periods may affect device reliability.

■ PACKAGE

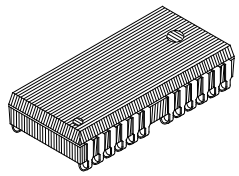

Plastic SOJ Package
(LCC-26P-M09)

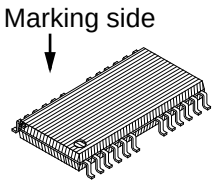

Plastic TSOP Package
(FPT-26P-M05)

Package and Ordering Information

– 26-pin plastic (300mil) SOJ, order as MB8117405A-xxPJ

– 26-pin plastic (300mil) TSOP-II with normal bend leads, order as MB8117405A-xxPFTN

Fig. 1 – MB8117405A DYNAMIC RAM - BLOCK DIAGRAM

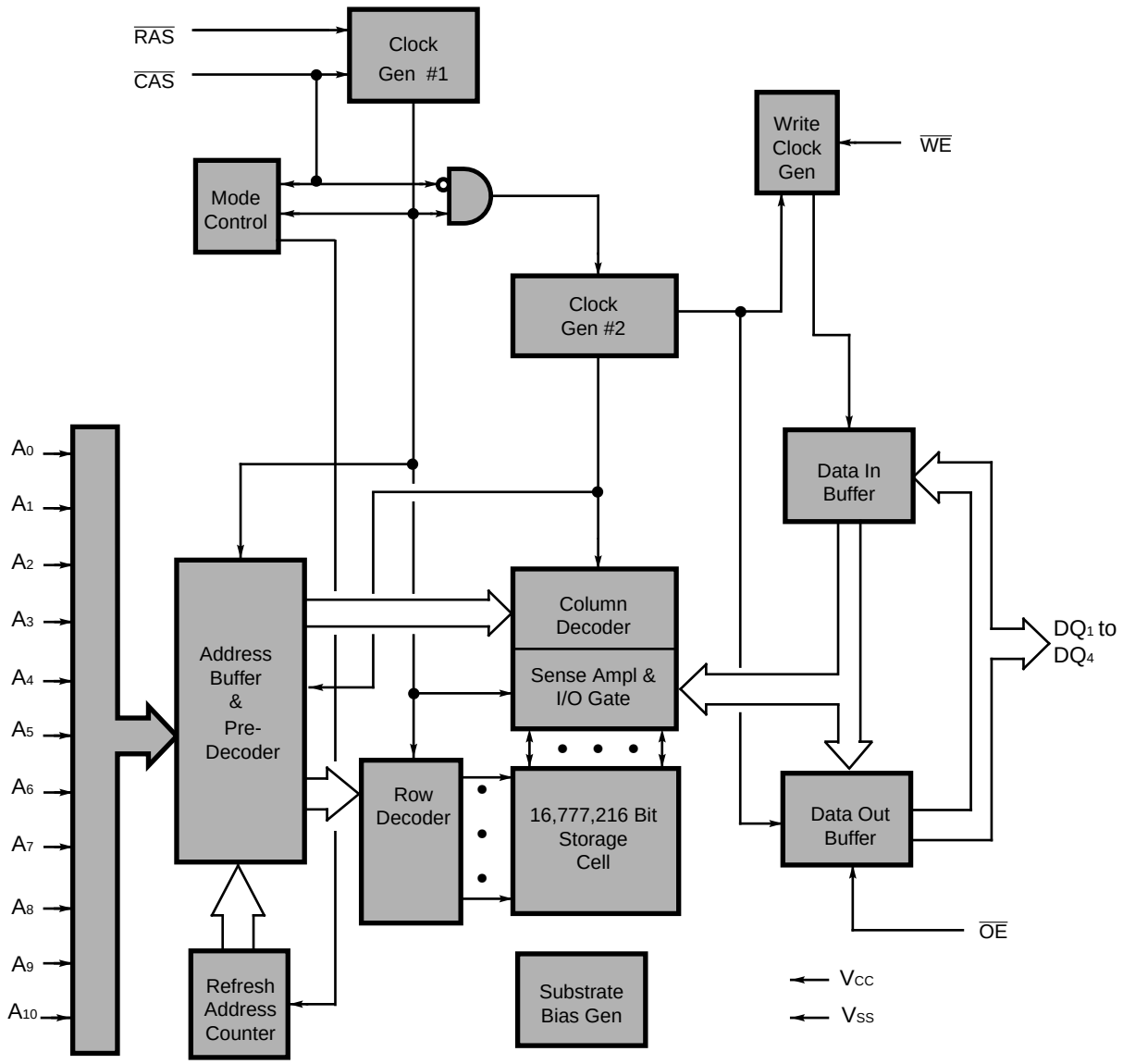

■ CAPACITANCE

(T_A = 25°C, f = 1 MHz)

Parameter	Symbol	Typ.	Max.	Unit
Input Capacitance, A_0 toA_{10}	C_{IN1}	—	5	pF
Input Capacitance, $\overline{RAS}$, $\overline{CAS}$, $\overline{WE}$, $\overline{OE}$	C_{IN2}	—	5	pF
Input/Output Capacitance, DQ_1 to DQ_4	C_{DQ}	—	7	pF

■ PIN ASSIGNMENTS AND DESCRIPTIONS

26-Pin SOJ:
(TOP VIEW)

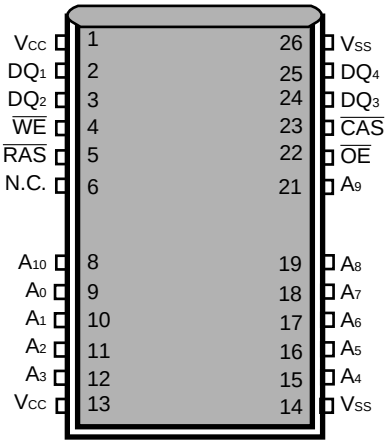

26-Pin FPT:
(TOP VIEW)

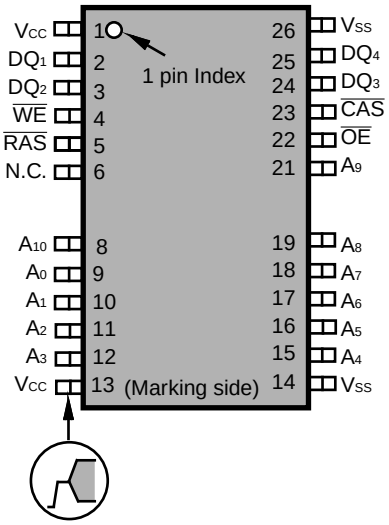

Designator	Function
DQ_1 to DQ_4	Data Input/ Output
$\overline{WE}$	Write Enable.
$\overline{RAS}$	Row address strobe.
A_0 to A_{10}	Address inputs.
V_{CC}	+5 volt power supply.
$\overline{OE}$	Output enable.
$\overline{CAS}$	Column address strobe.
V_{SS}	Circuit ground.
N.C.	No Connection

■ RECOMMENDED OPERATING CONDITIONS

Parameter	Notes	Symbol	Min.	Typ.	Max.	Unit	Ambient Operating Temp.
Spply Voltage	1	V_{CC}	4.5	5.0	5.5	V	0°C to +70°C
		V_{SS}	0	0	0		
Input High Voltage, all inputs	1	V_{IH}	2.4	—	6.5	V	
Input Low Voltage, all inputs/ outputs *	1	V_{IL}	–0.3	—	0.8	V	

* : Undershoots of up to –2.0 volts with a pulse width not exceeding 20ns are acceptable.

■ FUNCTIONAL OPERATION

ADDRESS INPUTS

Twenty-two input bits are required to decode any four of 16,777,216 cell addresses in the memory matrix. Since only twelve address bits (A_0 to A_{10}) are available, the row and column inputs are separately strobed by $\overline{RAS}$ and $\overline{CAS}$ as shown in Figure 1. First, twelve row address bits are input on pins A_0-through-A_{10} and latched with the row address strobe ($\overline{RAS}$) then, ten column address bits are input and latched with the column address strobe ($\overline{CAS}$). Both row and column addresses must be stable on or before the falling edge of $\overline{RAS}$ and $\overline{CAS}$, respectively. The address latches are of the flow-through type; thus, address information appearing after t_{RAH} (min.)+ t_T is automatically treated as the column address.

WRITE ENABLE

The read or write mode is determined by the logic state of $\overline{WE}$. When $\overline{WE}$ is active Low, a write cycle is initiated; when $\overline{WE}$ is High, a read cycle is selected. During the read mode, input data is ignored.

DATA INPUT

Input data is written into memory in either of three basic ways : an early write cycle, an $\overline{OE}$ (delayed) write cycle, and a read-modify-write cycle. The falling edge of $\overline{WE}$ or $\overline{CAS}$, whichever is later, serves as the input data-latch strobe. In an early write cycle, the input data (DQ_1-DQ_4) is strobed by $\overline{CAS}$ and the setup/hold times are referenced to $\overline{CAS}$ because $\overline{WE}$ goes Low before $\overline{CAS}$. In a delayed write or a read-modify-write cycle, $\overline{WE}$ goes Low after $\overline{CAS}$; thus, input data is strobed by $\overline{WE}$ and all setup/hold times are referenced to the write-enable signal.

DATA OUTPUT

The three-state buffers are TTL compatible with a fanout of two TTL loads. Polarity of the output data is identical to that of the input; the output buffers remain in the high-impedance state until the column address strobe goes Low. When a read or read-modify-write cycle is executed, valid outputs and High-Z state are obtained under the following conditions:

t_{RAC} : from the falling edge of $\overline{RAS}$ when t_{RCD} (max.) is satisfied.
t_{CAC} : from the falling edge of $\overline{CAS}$ when t_{RCD} is greater than t_{RCD} (max.).
t_{AA} : from column address inpit when t_{RAD} is greater than t_{RAD} (max.), and t_{RCD} (max.) is satisfied.
t_{OEA} : from the falling edge of $\overline{OE}$ when $\overline{OE}$ is brought Low after t_{RAC}, t_{CAC}, or t_{AA}.
t_{OEZ} : from $\overline{OE}$ inactive.
t_{OFF} : from $\overline{CAS}$ inactive while $\overline{RAS}$ inactive.
t_{OFR} : from $\overline{RAS}$ inactive while $\overline{CAS}$ inactive.
t_{WEZ} : from $\overline{WE}$ active while $\overline{CAS}$ inactive.

The data remains valid after either $\overline{OE}$ is inactive, or both $\overline{RAS}$ and $\overline{CAS}$ are inactive, or $\overline{CAS}$ is reactived. When an early write is execute, the output buffers remain in a high-impedance state during the entire cycle.

HYPER PAGE MODE OF OPERATION

The hyper page mode of operation provides faster memory access and lower power dissipation. The hyper page mode is implemented by keeping the same row address and strobing in successive column addresses. To satisfy these conditions, $\overline{RAS}$ is held Low for all contiguous memory cycles in which row addresses are common. For each page of memory (with column address locations), any of 1,024-bits can be accessed and, when multiple MB8117405As are used, $\overline{CAS}$ is decoded to select the desired memory page. Hyper page mode operations need not be addressed sequentially and combinations of read, write, and/or read-modify-write cycles are permitted. Hyper page mode features that output remains valid when $\overline{CAS}$ is inactive until $\overline{CAS}$ is reactivated.

■ DC CHARACTERISTICS

(Recommended operating conditions unless otherwise noted.) **Note 3**

Parameter	Notes	Symbol	Conditions	Value			Unit
				Min.	Typ.	Max.	
Output high voltage	1	V_{OH}	I_{OH} = –5 mA	2.4	—	—	V
Output low voltage	1	V_{OL}	I_{OL} = 4.2 mA	—	—	0.4	V
Input leakage current (any input)		$I_{I(L)}$	0 V ≤ V_{IN} ≤ 5.5 V; 4.5 V ≤ V_{CC} ≤ 5.5 V; V_{SS} = 0 V; All other pins under test = 0 V	–10	—	10	µA
Output leakage current		$I_{O(L)}$	0 V ≤ V_{OUT} ≤ 5.5 V; Data out disabled	–10	—	10	µA
Operating current (Average power supply current)	2 MB8117405A-60	I_{CC1}	$\overline{RAS}$ & $\overline{CAS}$ cycling; t_{RC} = min.	—	—	105	mA
	2 MB8117405A-70					90	mA
Standby current (Power supply current)	TTL level	I_{CC2}	$\overline{RAS}$ = $\overline{CAS}$ = V_{IH}	—	—	2.0	mA
	CMOS level		$\overline{RAS}$ = $\overline{CAS}$ ≥ V_{CC} –0.2 V			1.0	mA
Refresh current#1 (Average power supply current)	2 MB8117405A-60	I_{CC3}	$\overline{CAS}$ = V_{IH}, $\overline{RAS}$ cycling; t_{HPC} = min.	—	—	105	mA
	2 MB8117405A-70					90	mA
Hyper Page Mode current	2 MB8117405A-60	I_{CC4}	$\overline{RAS}$ = V_{IL}, $\overline{CAS}$ cycling; t_{HPC} = min.	—	—	105	mA
	2 MB8117405A-70					90	mA
Refresh current#2 (Average power supply current)	2 MB8117405A-60	I_{CC5}	$\overline{RAS}$ cycling; $\overline{CAS}$-before-$\overline{RAS}$; t_{RC} = min.	—	—	105	mA
	2 MB8117405A-70					90	mA

■ AC CHARACTERISTICS

(At recommended operating conditions unless otherwise noted.) **Notes 3, 4, 5**

No.	Parameter	Notes	Symbol	MB8117405A-60		MB8117405A-70		Unit
				Min.	Max.	Min.	Max.	
1	Time Between Refresh		t_{REF}	—	32.8	—	32.8	ms
2	Random Read/Write Cycle Time		t_{RC}	104	—	124	—	ns
3	Read-Modify-Write Cycle Time		t_{RWC}	138	—	162	—	ns
4	Access Time from $\overline{RAS}$	6, 9	t_{RAC}	—	60	—	70	ns
5	Access Time from $\overline{CAS}$	7, 9	t_{CAC}	—	15	—	17	ns
6	Column Address Access Time	8, 9	t_{AA}	—	30	—	35	ns
7	Output Hold Time		t_{OH}	3	—	3	—	ns
8	Output Hold Time from $\overline{CAS}$		t_{OHC}	5	—	5	—	ns
9	Output Buffer Turn On Delay Time		t_{ON}	0	—	0	—	ns
10	Output Buffer Turn off Delay Time	10	t_{OFF}	—	15	—	17	ns
11	Output Buffer Turn Off Delay Time from $\overline{RAS}$	10	t_{OFR}	—	15	—	17	ns
12	Output Buffer Turn Off Delay Time from $\overline{WE}$	10	t_{WEZ}	—	15	—	17	ns
13	Transition Time		t_T	1	50	1	50	ns
14	$\overline{RAS}$ Precharge Time		t_{RP}	40	—	50	—	ns
15	$\overline{RAS}$ Pulse Width		t_{RAS}	60	100000	70	100000	ns
16	$\overline{RAS}$ Hold Time		t_{RSH}	15	—	17	—	ns
17	$\overline{CAS}$ to $\overline{RAS}$ Precharge Time	21	t_{CRP}	5	—	5	—	ns
18	$\overline{RAS}$ to $\overline{CAS}$ Delay Time	11, 12, 22	t_{RCD}	14	45	14	53	ns
19	$\overline{CAS}$ Pulse Width		t_{CAS}	10	—	13	—	ns
20	$\overline{CAS}$ Hold Time		t_{CSH}	40	—	50	—	ns
21	$\overline{CAS}$ Precharge Time (Normal)	19	t_{CPN}	10	—	10	—	ns
22	Row Address Set Up Time		t_{ASR}	0	—	0	—	ns
23	Row Address Hold Time		t_{RAH}	10	—	10	—	ns
24	Column Address Set Up Time		t_{ASC}	0	—	0	—	ns
25	Column Address Hold Time		t_{CAH}	10	—	10	—	ns
26	Column Address Hold Time from $\overline{RAS}$		t_{AR}	24	—	24	—	ns
27	$\overline{RAS}$ to Column Address Delay Time	13	t_{RAD}	12	30	12	35	ns
28	Column Address to $\overline{RAS}$ Lead Time		t_{RAL}	30	—	35	—	ns
29	Column Address to $\overline{CAS}$ Lead Time		t_{CAL}	23	—	28	—	ns
30	Read Command Set Up Time		t_{RCS}	0	—	0	—	ns
31	Read Command Hold Time Referenced to $\overline{RAS}$	14	t_{RRH}	0	—	0	—	ns
32	Read Command Hold Time Referenced to $\overline{CAS}$	14	t_{RCH}	0	—	0	—	ns
33	Write Command Set Up Time	15, 20	t_{WCS}	0	—	0	—	ns
34	Write Command Hold Time		t_{WCH}	10	—	10	—	ns
35	Write Hold Time from $\overline{RAS}$		t_{WCR}	24	—	24	—	ns

(Continued)

■ AC CHARACTERISTICS (Continued)

(At recommended operating conditions unless otherwise noted.) **Notes 3, 4, 5**

No.	Parameter	Notes	Symbol	MB8117405A-60		MB8117405A-70		Unit
				Min.	Max.	Min.	Max.	
36	$\overline{WE}$ Pulse Width		t_{WP}	10	—	10	—	ns
37	Write Command to $\overline{RAS}$ Lead Time		t_{RWL}	15	—	17	—	ns
38	Write Command to $\overline{CAS}$ Lead Time		t_{CWL}	10	—	13	—	ns
39	DIN Set Up Time		t_{DS}	0	—	0	—	ns
40	DIN Hold Time		t_{DH}	10	—	10	—	ns
41	Data Hold Time from $\overline{RAS}$		t_{DHR}	24	—	24	—	ns
42	$\overline{RAS}$ to $\overline{WE}$ Delay Time	20	t_{RWD}	77	—	89	—	ns
43	$\overline{CAS}$ to $\overline{WE}$ Delay Time	20	t_{CWD}	32	—	36	—	ns
44	Column Address to $\overline{WE}$ Delay Time	20	t_{AWD}	47	—	54	—	ns
45	$\overline{RAS}$ Precharge Time to $\overline{CAS}$ Active Time (Refresh cycles)		t_{RPC}	5	—	5	—	ns
46	$\overline{CAS}$ Set Up Time for $\overline{CAS}$-before-$\overline{RAS}$ Refresh		t_{CSR}	0	—	0	—	ns
47	$\overline{CAS}$ Hold Time for $\overline{CAS}$-before-$\overline{RAS}$ Refresh		t_{CHR}	10	—	12	—	ns
48	Access time from $\overline{OE}$	9	t_{OEA}	—	15	—	17	ns
49	Output Buffer Turn Off Delay from $\overline{OE}$	10	t_{OEZ}	—	15	—	17	ns
50	$\overline{OE}$ to $\overline{RAS}$ Lead Time for Valid Data		t_{OEL}	10	—	10	—	ns
51	$\overline{OE}$ to $\overline{CAS}$ Lead Time		t_{COL}	5	—	5	—	ns
52	$\overline{OE}$ Hold Time Referenced to $\overline{WE}$	16	t_{OEH}	5	—	5	—	ns
53	$\overline{OE}$ to Data in Delay Time		t_{OED}	15	—	17	—	ns
54	$\overline{RAS}$ to Data in Delay Time		t_{RDD}	15	—	17	—	ns
55	$\overline{CAS}$ to Data in Delay Time		t_{CDD}	15	—	17	—	ns
56	DIN to $\overline{CAS}$ Delay Time	17	t_{DZC}	0	—	0	—	ns
57	DIN to $\overline{OE}$ Delay Time	17	t_{DZO}	0	—	0	—	ns
58	DIN to $\overline{OE}$ Delay Time		t_{OEP}	8	—	8	—	ns
59	$\overline{OE}$ Hold Time Referenced to $\overline{CAS}$		t_{OECH}	10	—	10	—	ns
60	$\overline{WE}$ Precharge Time		t_{WPZ}	8	—	8	—	ns
61	$\overline{WE}$ to Date In Delay Time		t_{WED}	15	—	17	—	ns
62	Hyper Page Mode $\overline{RAS}$ Pulse width		t_{RASP}	—	100000	—	100000	ns
63	Hyper Page Mode Read/Write Cycle Time		t_{HPC}	25	—	30	—	ns
64	Hyper Page Mode Read-Modify-Write Cycle Time		t_{HPRWC}	69	—	79	—	ns
65	Access Time from $\overline{CAS}$ Precharge	9, 18	t_{CPA}	—	35	—	40	ns
66	Hyper Page Mode $\overline{CAS}$ Precharge Time		t_{CP}	10	—	10	—	ns
67	Hyper Page Mode $\overline{RAS}$ Hold Time from $\overline{CAS}$ Precharge		t_{RHCP}	35	—	40	—	ns
68	Hyper Page Mode $\overline{CAS}$ Precharge to $\overline{WE}$ Delay Time		t_{CPWD}	52	—	59	—	ns

Notes:
1. Referenced to V_{SS}.
2. I_{CC} depends on the output load conditions and cycle rates; The specified values are obtained with the output open. I_{CC} depends on the number of address change as $\overline{RAS} = V_{IL}$, $\overline{CAS} = V_{IH}$ and $V_{IL} > -0.3$ V. I_{CC1}, I_{CC3}, I_{CC4} and I_{CC5} are specified at one time of address change during $\overline{RAS} = V_{IL}$ and $\overline{CAS} = V_{IH}$. I_{CC2} is specified during $\overline{RAS} = V_{IH}$ and $V_{IL} > -0.3$ V.
3. An initial pause ($\overline{RAS} = \overline{CAS} = V_{IH}$) of 200 µs is required after power-up followed by any eight $\overline{RAS}$-only cycles before proper device operation is achieved. In case of using internal refresh counter, a minimum of eight $\overline{CAS}$-before-$\overline{RAS}$ initialization cycles instead of 8 $\overline{RAS}$ cycles are required.
4. AC characteristics assume t_T = 2ns.
5. V_{IH} (min.) and V_{IL} (max.) are reference levels for measuring timing of input signals. Also transition times are measured between V_{IH} (min.) and V_{IL} (max.).
6. Assumes that $t_{RCD} \leq t_{RCD}$ (max.), $t_{RAD} \leq t_{RAD}$ (max.). If t_{RCD} is greater than the maximum recomended value shown in this table, t_{RAC} will be increased by the amount that t_{RCD} exceeds the value shown. Refer to Fig. 2 and 3.
7. If $t_{RCD} \geq t_{RCD}$ (max.), $t_{RAD} \geq t_{RAD}$ (max.), and $t_{ASC} \geq t_{AA} - t_{CAC} - t_T$, access time is t_{CAC}.
8. If $t_{RCD} \geq t_{RCD}$ (max.) and $t_{ASC} \leq t_{AA} - t_{CAC} - t_T$, access time is t_{AA}.
9. Measured with a load equivalent to two TTL loads and 50 pF.
10. t_{OFF} and t_{OEZ} is specified that output buffer change to high impedance state.
11. Operation within the t_{RCD} (max.) limit ensures that t_{RAC} (max.) can be met. t_{RCD} (max.) is specified as a reference point only; if t_{RCD} is greater than the specified t_{RCD} (max.) limit, access time is controlled exclusively by t_{CAC} or t_{AA}.
12. t_{RCD} (min.) = t_{RAH} (min.)+ $2t_T$ + t_{ASC} (min.).
13. Operation within the t_{RAD} (max.) limit ensures that t_{RAC} (max.) can be met. t_{RAD} (max.) is specified as a reference point only; if t_{RAD} is greater than the specified t_{RAD} (max.) limit, access time is controlled exclusively by t_{CAC} or t_{AA}.
14. Either t_{RRH} or t_{RCH} must be satisfied for a read cycle.
15. t_{WCS} is specified as a reference point only. If $t_{WCS} \geq t_{WCS}$ (min.) the data output pin will remain High-Z state through entire cycle.
16. Assumes that $t_{WCS} < t_{WCS}$ (min.).
17. Either t_{DZC} or t_{DZO} must be satisfied.
18. t_{CPA} is access time from the selection of a new column address (that is caused by changing $\overline{CAS}$ from “L” to “H”). Therefore, if t_{CP} is long, t_{CPA} is longer than t_{CPA} (max.).
19. Assumes that $\overline{CAS}$-before-$\overline{RAS}$ refresh.
20. t_{WCS}, t_{CWD}, t_{RWD} and t_{AWD} are not restrictive operating parameters. They are included in the data sheet as an electrical characteristic only. If $t_{WCS} > t_{WCS}$ (min.), the cycle is an early write cycle and Dout pin will maintain high impedance state thoughout the entire cycle. If $t_{CWD} > t_{CWD}$ (min.), $t_{RWD} > t_{RWD}$ (min.) , and $t_{AWD} > t_{AWD}$ (min.), the cycle is a read modify-write cycle and data from the selected cell will appear at the Dout pin. If neither of the above conditions is satisfied, the cycle is a delayed write cycle and invalid data will appear the Dout pin, and write operation can be executed by satisfying t_{RWL}, t_{CWL}, and t_{RAL} specifications.
21. The last $\overline{CAS}$ rising edge.
22. The first $\overline{CAS}$ falling edge.

Fig. 2 – t_{RAC} vs. t_{RCD}

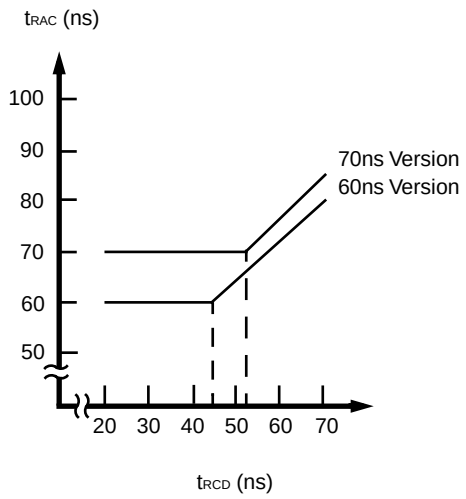

Fig. 3 – t_{RAC} vs. t_{RAD}

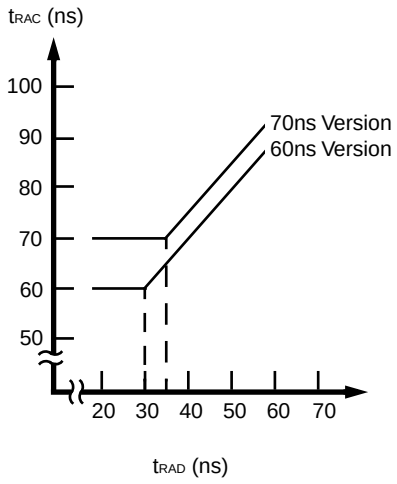

Fig. 4 – t_{CPA} vs. t_{CP}

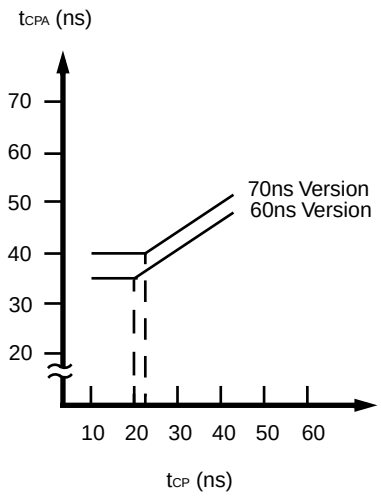

■ FUNCTIONAL TRUTH TABLE

Operation Mode	Clock Input				Address		Input Data		Refresh	Note
	$\overline{RAS}$	$\overline{CAS}$	$\overline{WE}$	$\overline{OE}$	Row	Column	Input	Output		
Standby	H	H	X	X	—	—	—	High-Z	—	
Read Cycle	L	L	H	L	Valid	Valid	—	Valid	Yes *	$t_{RCS} \geq t_{RCS}$ (min.)
Write Cycle (Early Write)	L	L	L	X	Valid	Valid	Valid	High-Z	Yes *	$t_{WCS} \geq t_{WCS}$ (min.)
Read-Modify-Write Cycle	L	L	H→L	L→H	Valid	Valid	Valid	Valid	Yes *	
$\overline{RAS}$-only Refresh Cycle	L	H	X	X	Valid	—	—	High-Z	Yes	
$\overline{CAS}$-before-$\overline{RAS}$ Refresh Cycle	L	L	H	X	—	—	—	High-Z	Yes	$t_{CSR} \geq t_{CSR}$ (min.)
Hidden Refresh Cycle	H→L	L	H→X	L	—	—	—	Valid	Yes	Previous data is kept.

X: “H” or “L”

*: It is impossible in Hyper Page Mode

Fig. 5 – READ CYCLE

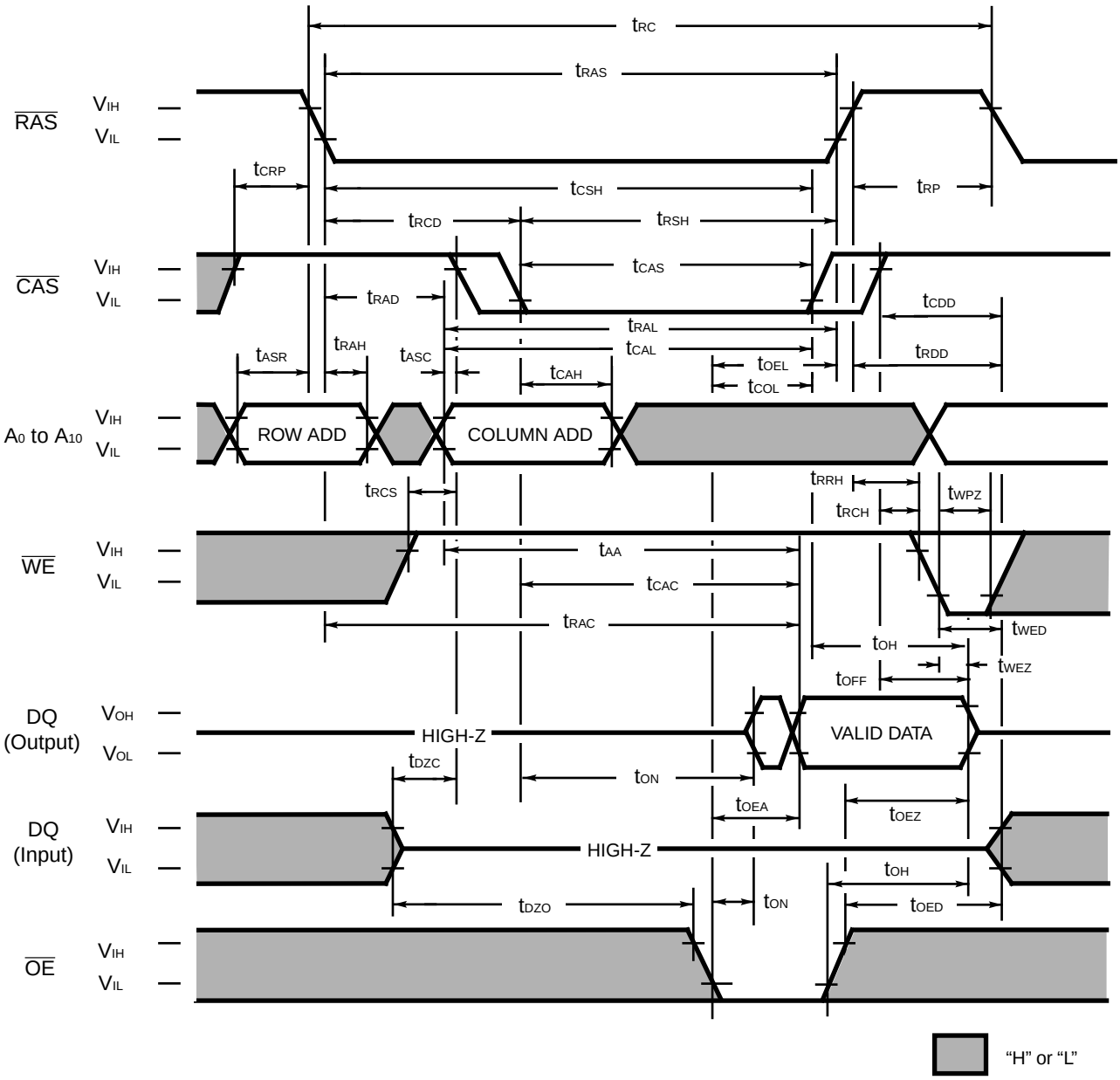

DESCRIPTION

To implement a read operation, a valid address is latched in by the $\overline{RAS}$ and $\overline{CAS}$ and with $\overline{WE}$ set to a High level and $\overline{OE}$ set to a Low level, the output is valid once the memory access time has elapsed. The access time is determined by $\overline{RAS}$(t_{RAC}), $\overline{CAS}$(t_{CAC}), $\overline{OE}$ (t_{OEA}) or column addresses (t_{AA}) under the following conditions:

If $t_{RCD} > t_{RCD}$ (max.), access time = t_{CAC}.

If $t_{RAD} > t_{RAD}$ (max.), access time = t_{AA}.

If $\overline{OE}$ is brought Low after t_{RAC}, t_{CAC}, or t_{AA} (whichever occurs later), access time = t_{OEA}

However, if either $\overline{CAS}$ or $\overline{OE}$ goes High, the output returns to a high-impedance state after t_{OH} is satisfied.

Fig. 6 – EARLY WRITE CYCLE ($\overline{OE}$ = "H" or "L")

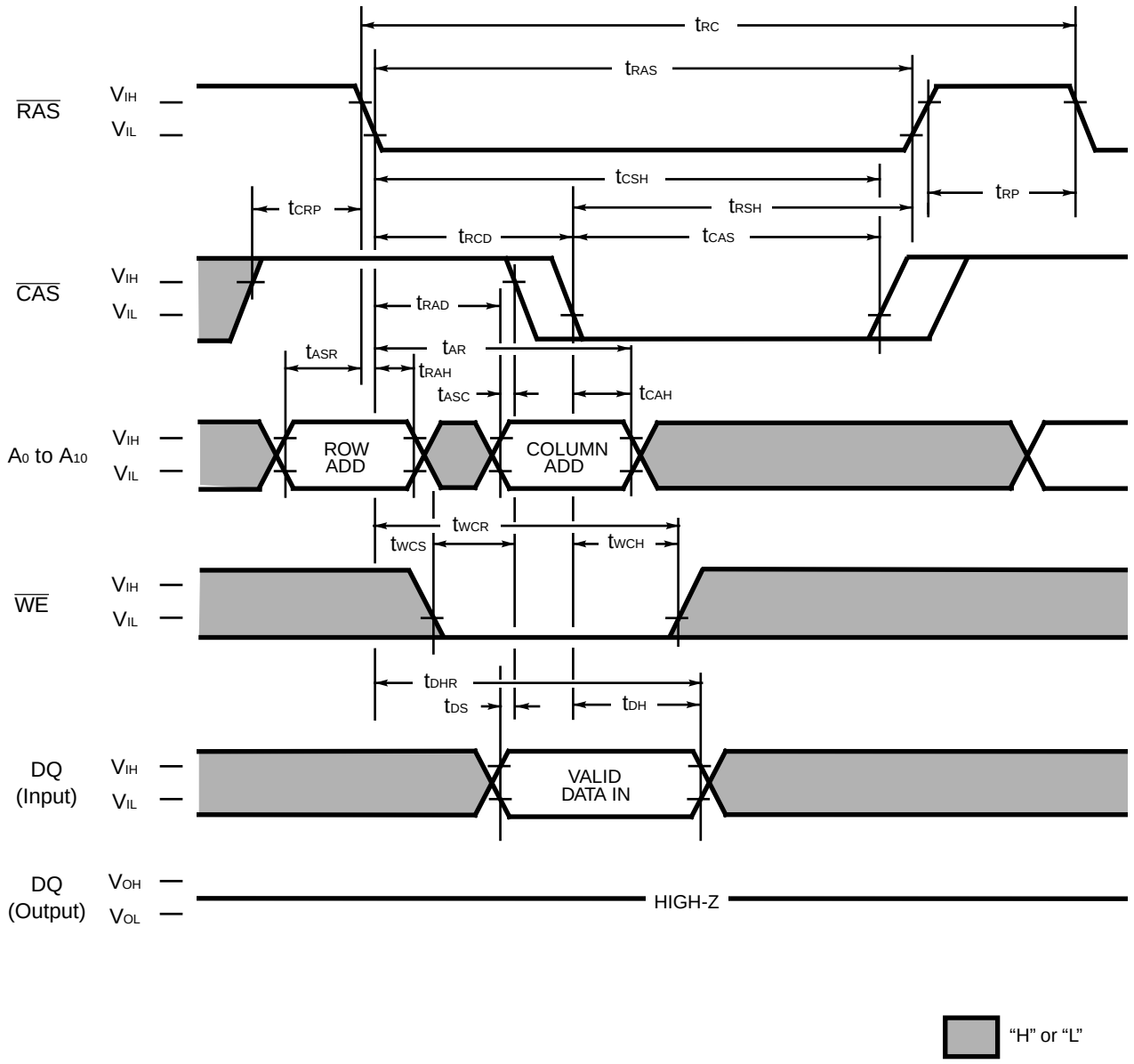

DESCRIPTION

A write cycle is similar to a read cycle except $\overline{WE}$ is set to a Low state and $\overline{OE}$ is a "H" or "L" signal. A write cycle can be implemented in either of three ways–early write, $\overline{OE}$ write (delayed write), or read-modify-write. During all write cycles, timing parameters t_{RWL}, t_{CWL} and t_{RAL} must be satisfied. In the early write cycle shown above t_{WCS} satisfied, data on the DQ pin is latched with the falling edge of $\overline{CAS}$ and written into memory.

Fig. 7 – DELAYED WRITE CYCLE ($\overline{OE}$ Control)

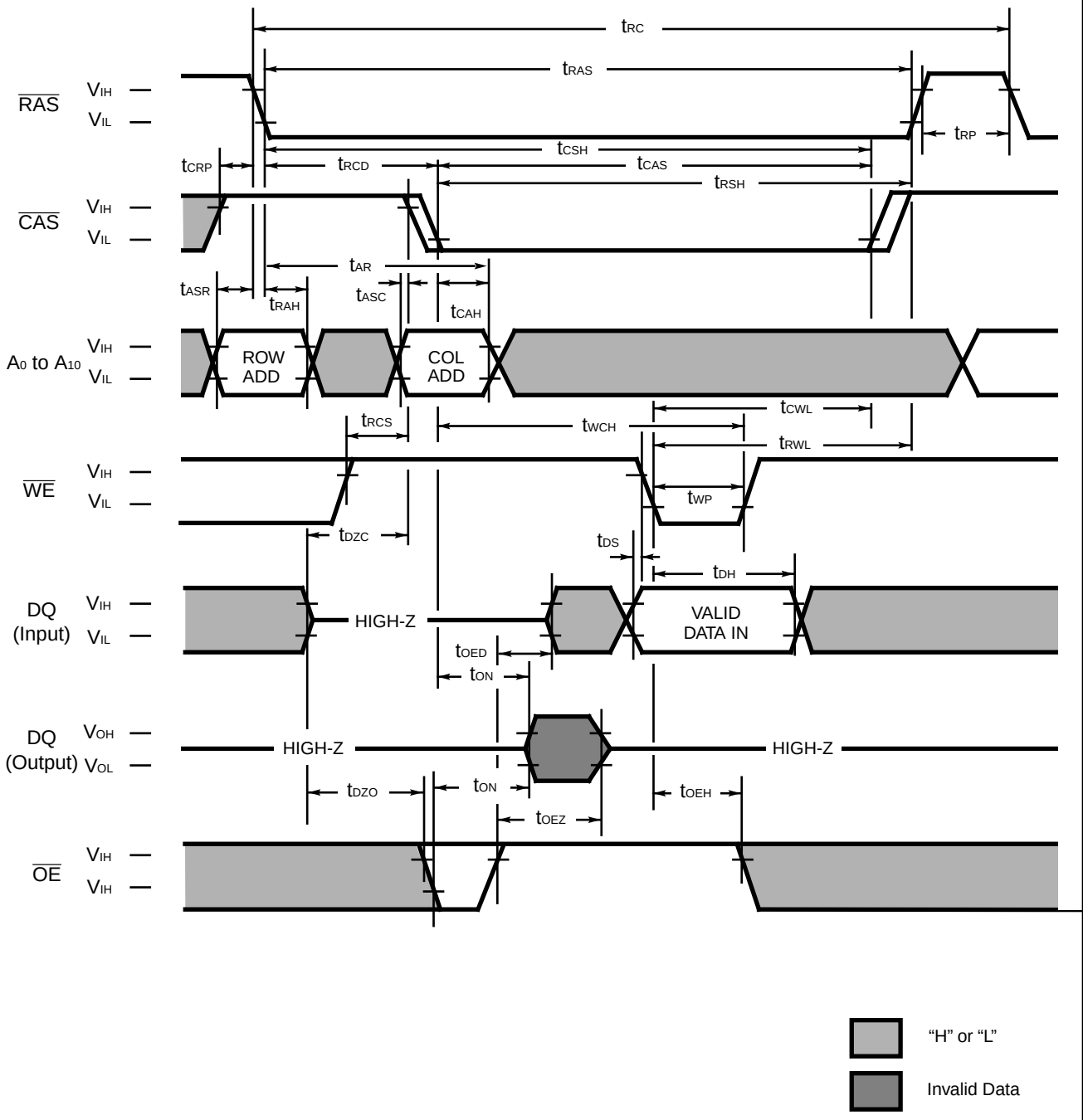

DESCRIPTION

In the $\overline{OE}$ (delayed write) cycle, t_{WCS} is not satisfied ; thus, the data on the DQ pins is latched with the falling edge of $\overline{WE}$ and written into memory. The Output Enable ($\overline{OE}$) signal must be changed from Low to High before $\overline{WE}$ goes Low (t_{OED} + t_{DS}).

Fig. 8 – READ-WRITE/READ-MODIFY-WRITE-CYCLE

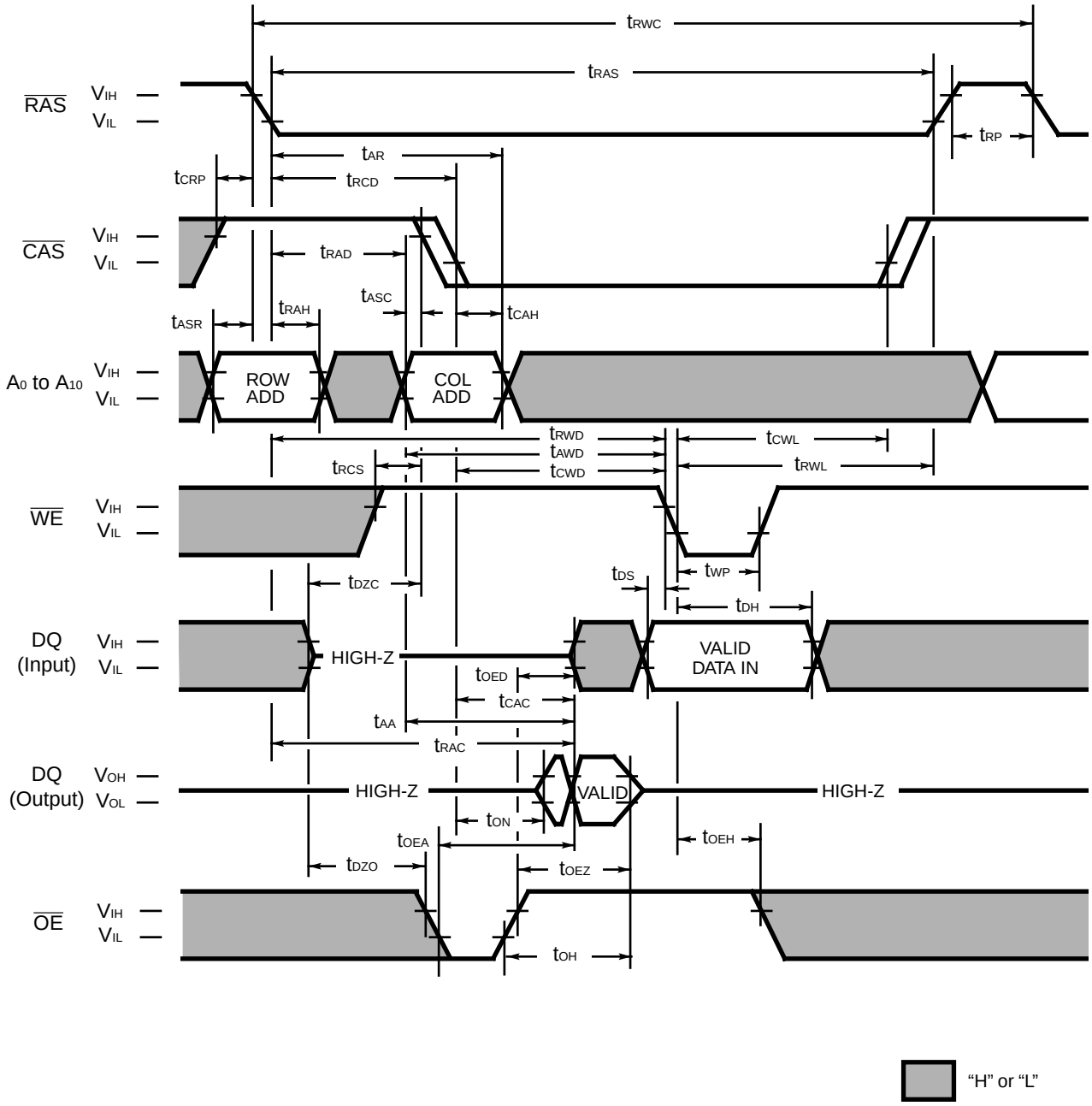

DESCRIPTION

The read-modify-write cycle is executed by changing $\overline{WE}$ from High to Low after the data appears on the DQ pins. In the read-modify-write cycle, $\overline{OE}$ must be changed from Low to High after the memory access time.

Fig. 9 – HYPER PAGE MODE READ CYCLE

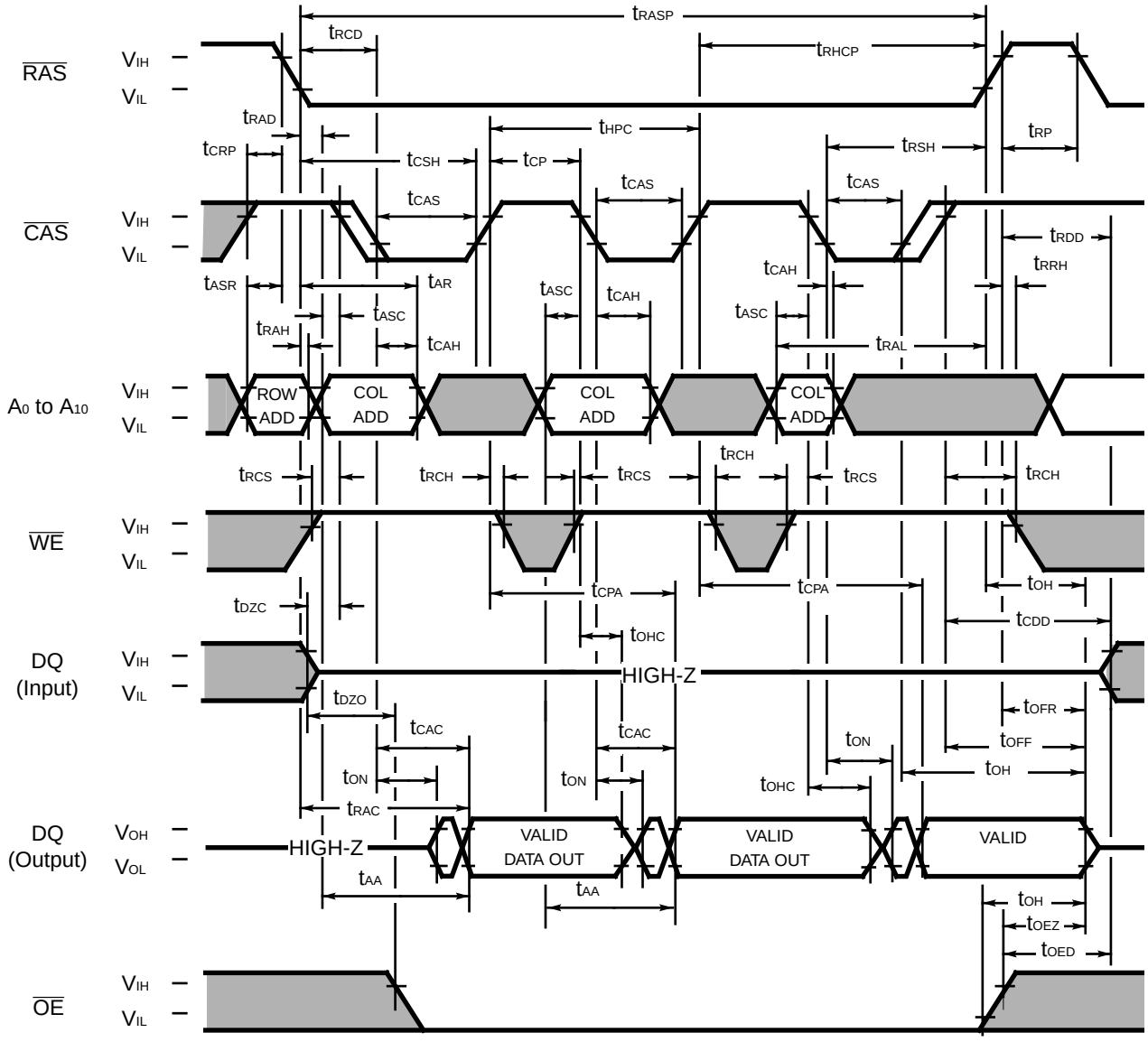

During one cycle is achieved in hyper-page mode, the input/output timing apply the same manner as the former cycle.

"H" or "L"

DESCRIPTION

The hyper page mode of operation permits faster successive memory operations at multiple column locations of the same row address.

This operation is performed by strobing in the row address and maintaining $\overline{RAS}$ at a Low level during all successive memory cycles in which the row address is latched. The access time is determined by t_{CAC}, t_{AA}, t_{CPA}, or t_{OEA}, whichever one is the latest in occurring.

Fig. 10 – HYPER PAGE MODE READ CYCLE ($\overline{OE}$ Control)

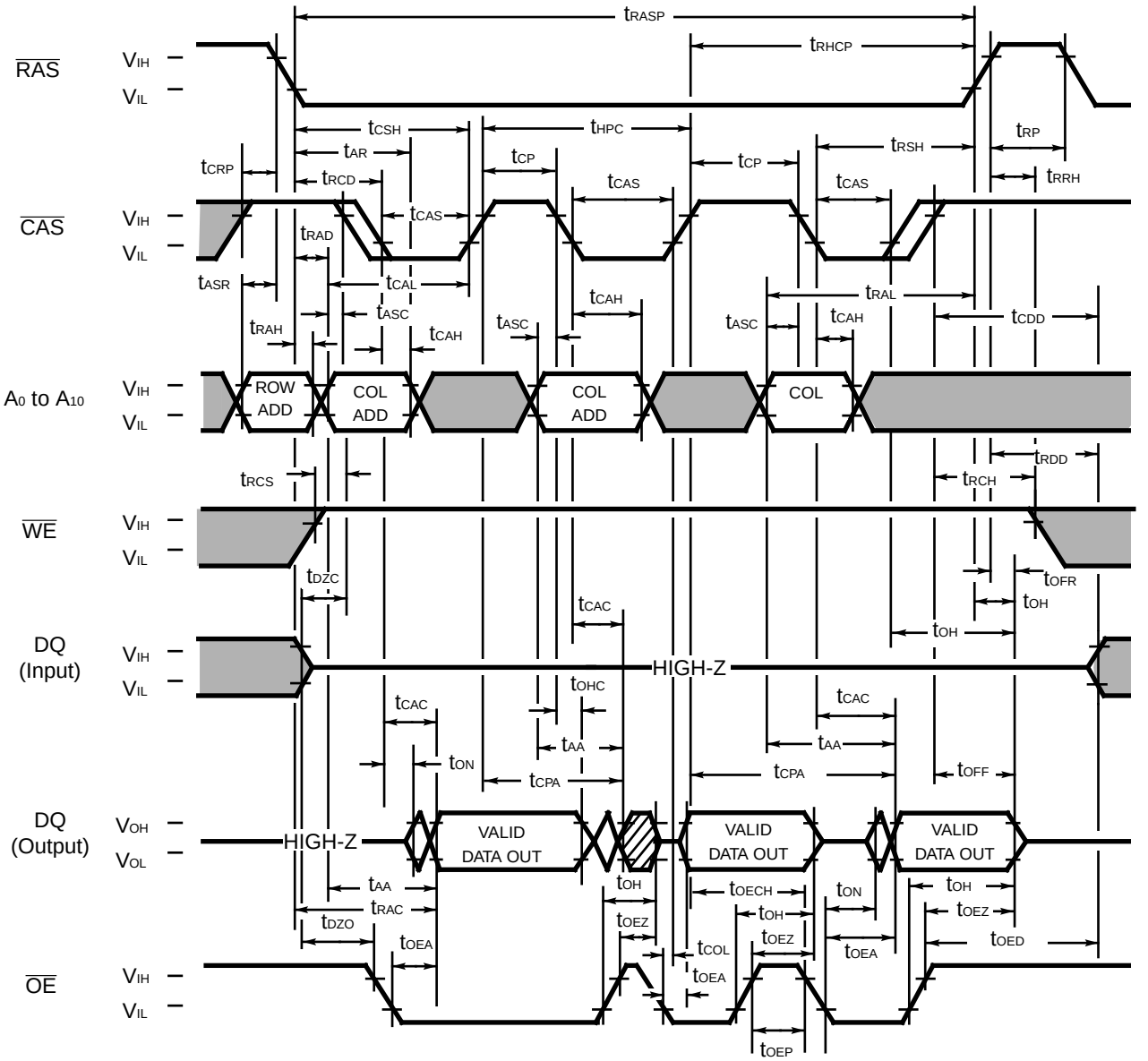

During one cycle is achieved in hyper-page mode, the input/output timing apply the same manner as the former cycle.

"H" or "L"

Valid output

DESCRIPTION

The hyper page mode of operation permits faster successive memory operations at multiple column locations of the same row address.

This operation is performed by strobing in the row address and maintaining $\overline{RAS}$ at a Low level and $\overline{WE}$ at a High level during all successive memory cycles in which the row address is latched. The access time is determined by t_{CAC}, t_{AA}, t_{CPA}, or t_{OEA}, whichever one is the latest in occurring.

To obtain a high impedance state, set $\overline{OE}$ or both $\overline{RAS}$ and $\overline{CAS}$ going high level.

Fig. 11 – HYPER PAGE MODE READ CYCLE ($\overline{WE}$ Control)

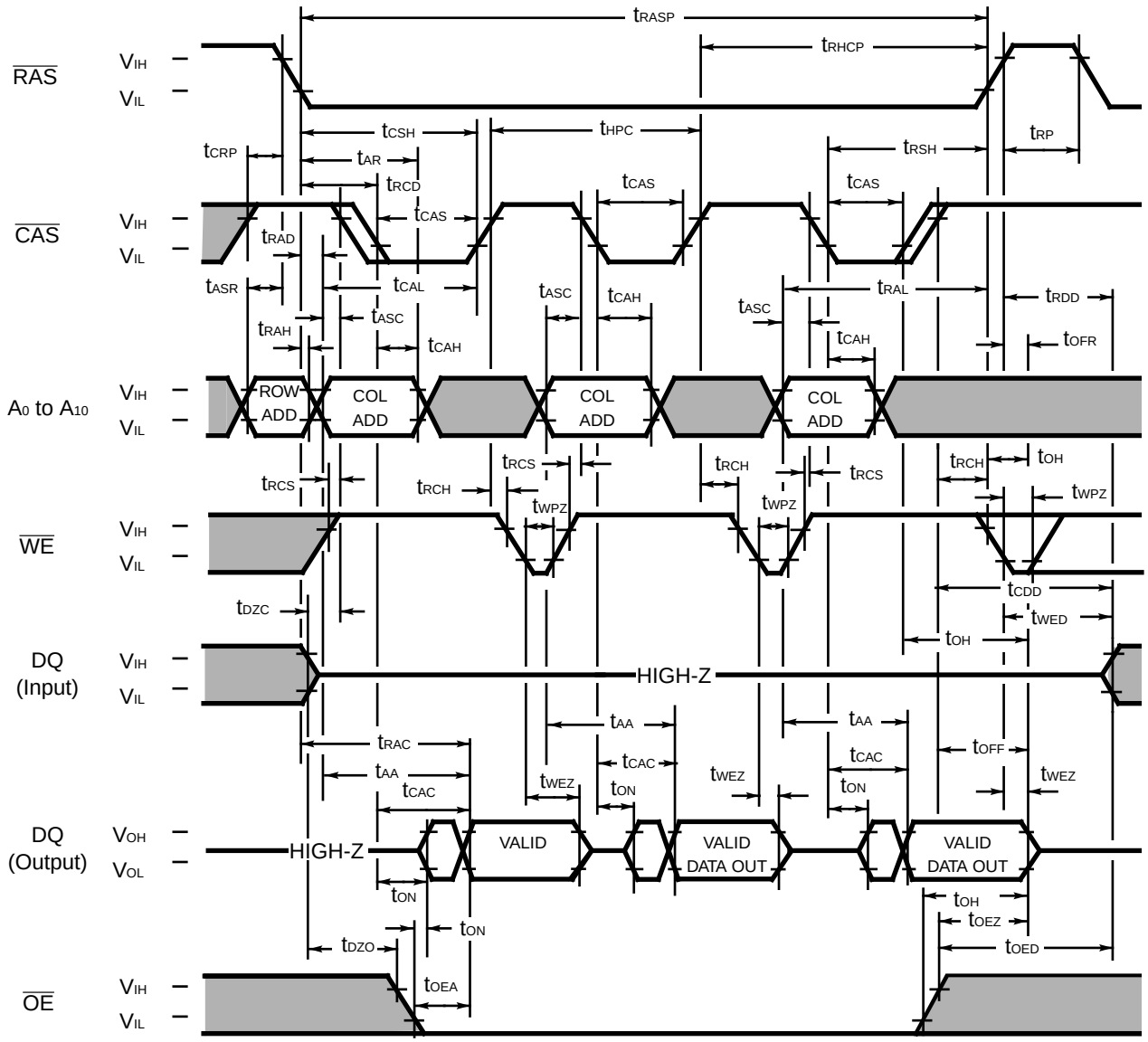

During one cycle is achieved in hyper-page mode, the input/output timing apply the same manner as the former cycle.

"H" or "L"

DESCRIPTION

The hyper page mode of operation permits faster successive memory operations at multiple column locations of the same row address.

This operation is performed by strobing in the row address and maintaining $\overline{RAS}$ at a Low level during all successive memory cycles in which the row address is latched. The access time is determined by t_{CAC}, t_{AA}, t_{CPA}, or t_{OEA}, whichever one is the latest in occurring. To obtain a high impedance state, confirm either of the following conditions, $\overline{OE}$ set to a High level or $\overline{WE}$ set to a Low level after $\overline{CAS}$ set to a High level or $\overline{RAS}$ and $\overline{CAS}$ set to a High level.

Fig. 12 – HYPER PAGE MODE EARLY WRITE CYCLE

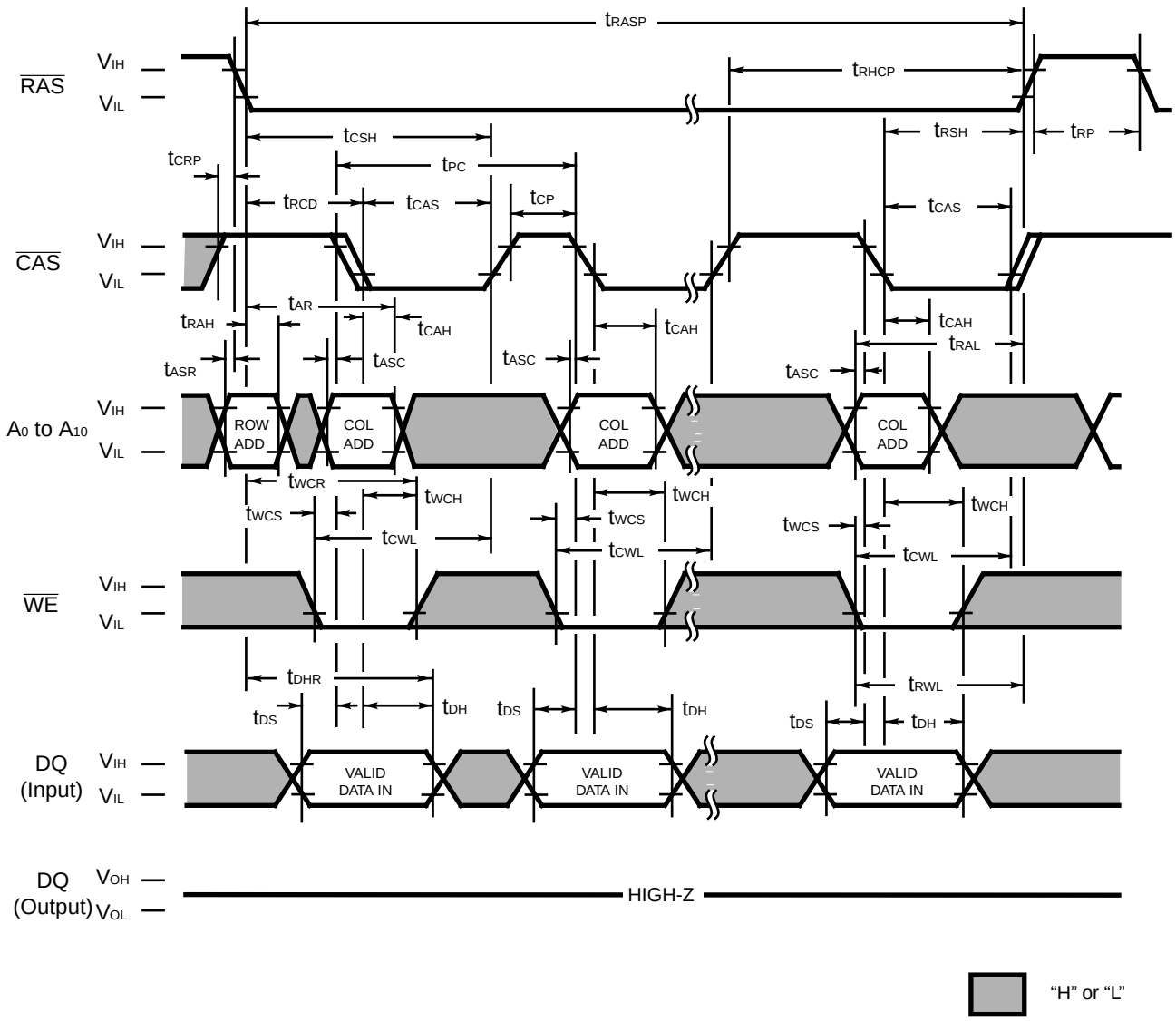

DESCRIPTION

The hyper page mode write cycle is executed in the same manner as the hyper page mode read cycle except the states of $\overline{WE}$ and $\overline{OE}$ are reversed. Data appearing on the DQ pins is latched on the falling edge of $\overline{CAS}$ and written into memory. During the hyper page mode write cycle, including the delayed ($\overline{OE}$) write and read-modify-write cycles, t_{CWL} must be satisfied.

Fig. 13 – HYPER PAGE MODE DELAYED WRITE CYCLE

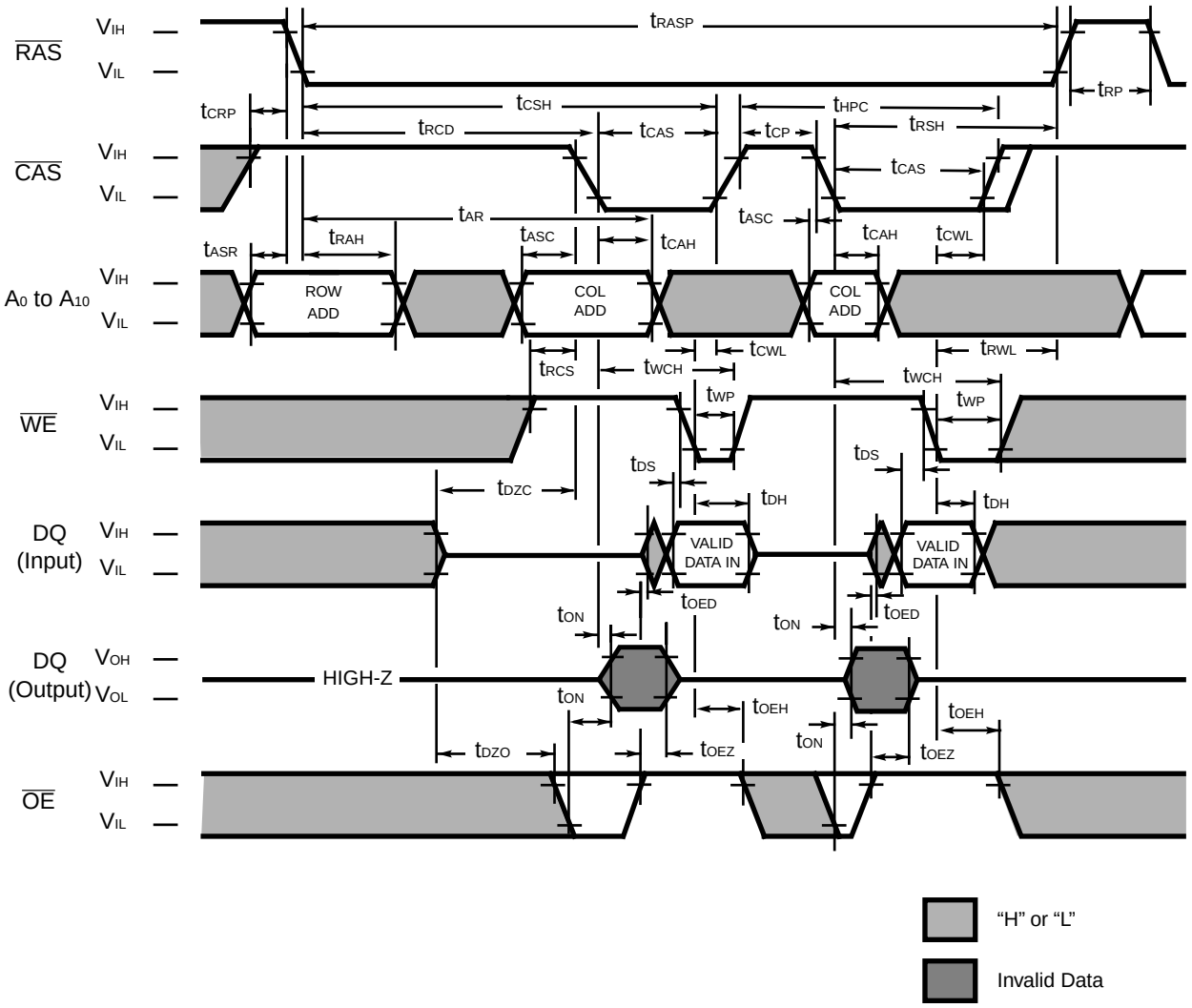

DESCRIPTION

The hyper page mode delayed write cycle is executed in the same manner as the hyper page mode early write cycle except for the states of $\overline{WE}$ and $\overline{OE}$. Input data on the DQ pins are latched on the falling edge of $\overline{WE}$ and written into memory. In the hyper page mode delayed write cycle, $\overline{OE}$ must be changed from Low to High before $\overline{WE}$ goes Low ($t_{OED} + t_T + t_{DS}$).

Fig. 14 – HYPER PAGE MODE READ/WRITE MIXED CYCLE

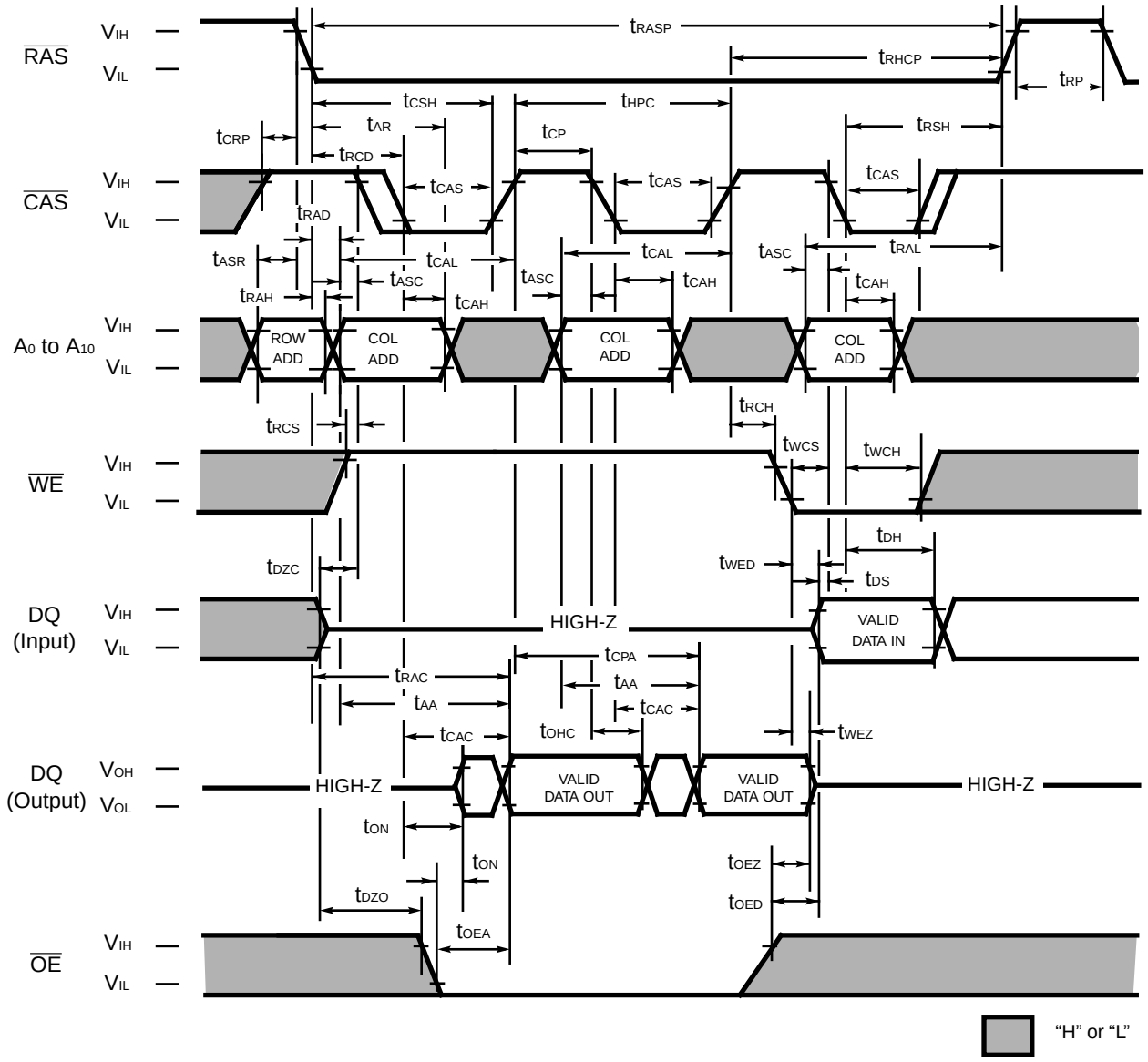

DESCRIPTION

The hyper page mode performs read/write operations repetitively during one $\overline{RAS}$ cycle. At this time, t_{HPC} (min.) is invalid.

Fig. 15 – HYPER PAGE MODE READ MODIFY WRITE CYCLE

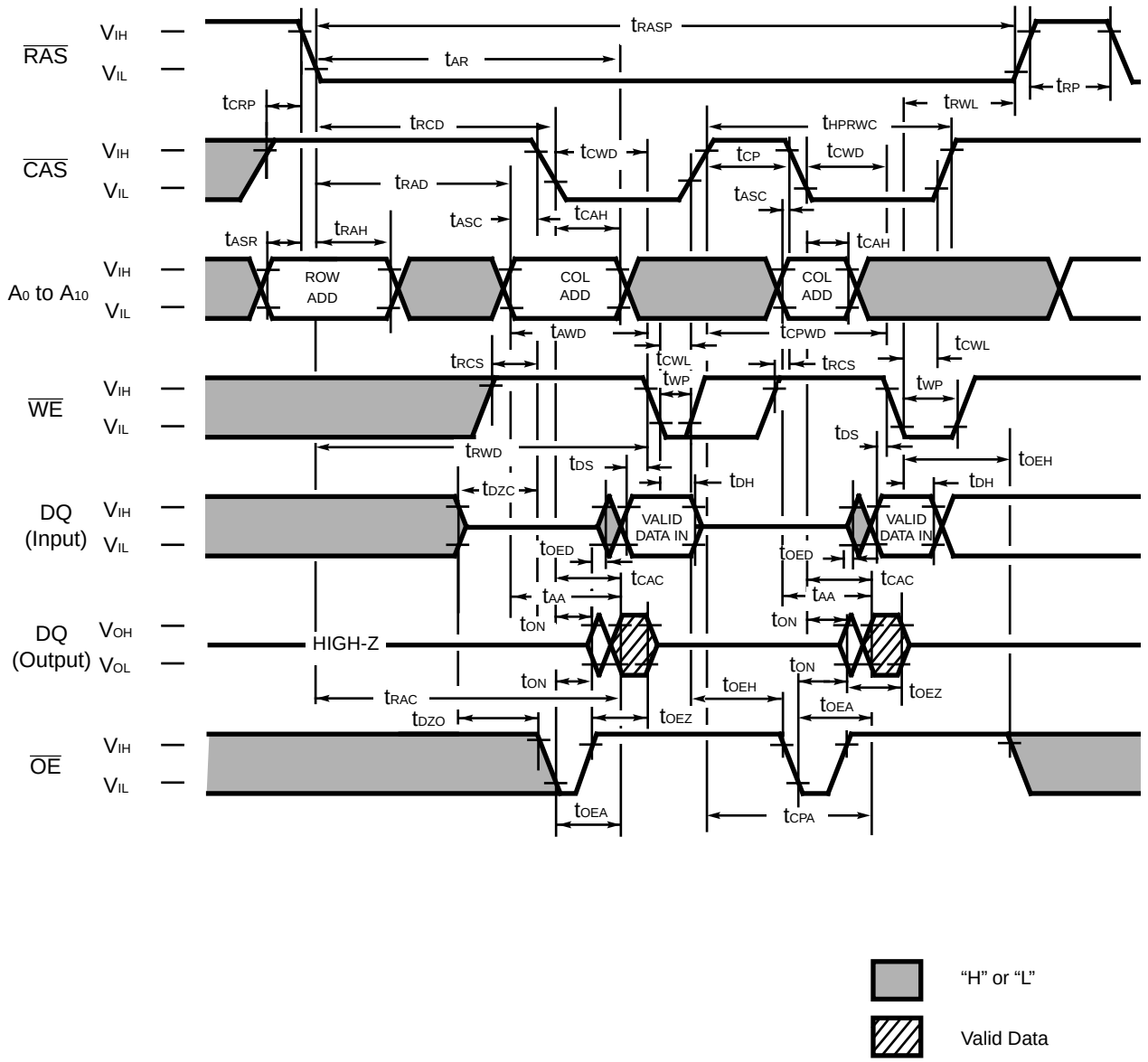

DESCRIPTION

During the hyper page mode of operation, the read-modify-write cycle can be executed by switching $\overline{WE}$ from High to Low after input data appears at the DQ pins during a normal cycle.

Fig. 16 – $\overline{RAS}$-ONLY REFRESH ($\overline{WE}$ = $\overline{OE}$ = "H" or "L")

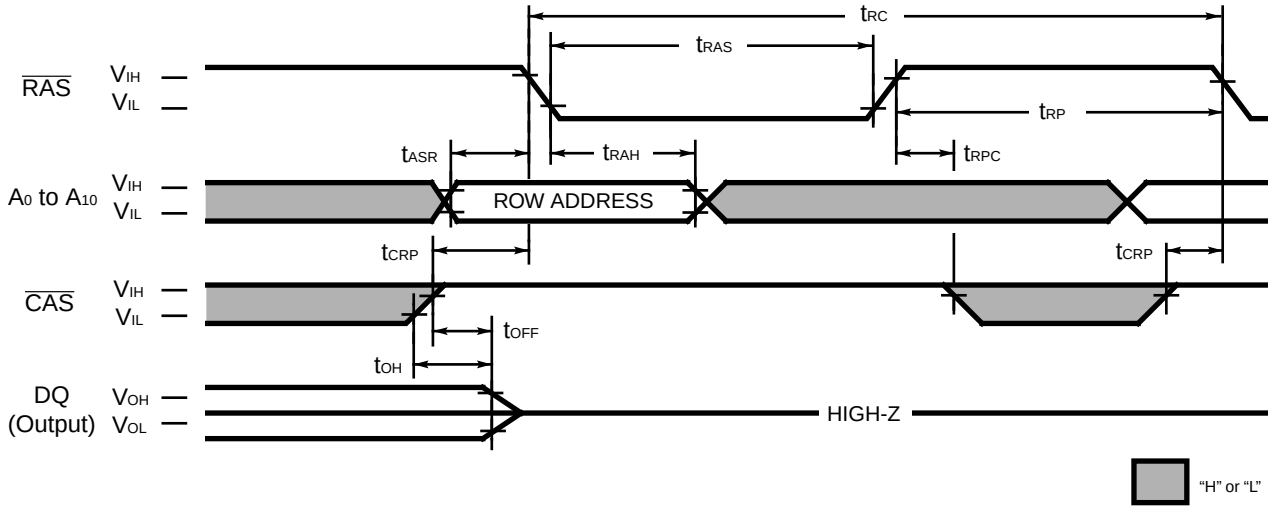

DESCRIPTION

Refresh of RAM memory cells is accomplished by performing a read, a write, or a read-modify-write cycle at each of 2048 row addresses every 32.8-milliseconds. Three refresh modes are available: $\overline{RAS}$-only refresh, $\overline{CAS}$-before-$\overline{RAS}$ refresh, and hidden refresh.

$\overline{RAS}$-only refresh is performed by keeping $\overline{RAS}$ Low and $\overline{CAS}$ High throughout the cycle; the row address to be refreshed is latched on the falling edge of $\overline{RAS}$. During $\overline{RAS}$-only refresh, D_{OUT} pin is kept in a high-impedance state.

Fig. 17 – $\overline{CAS}$-BEFORE-$\overline{RAS}$ REFRESH (ADRESS = $\overline{WE}$ = $\overline{OE}$ = "H" or "L")

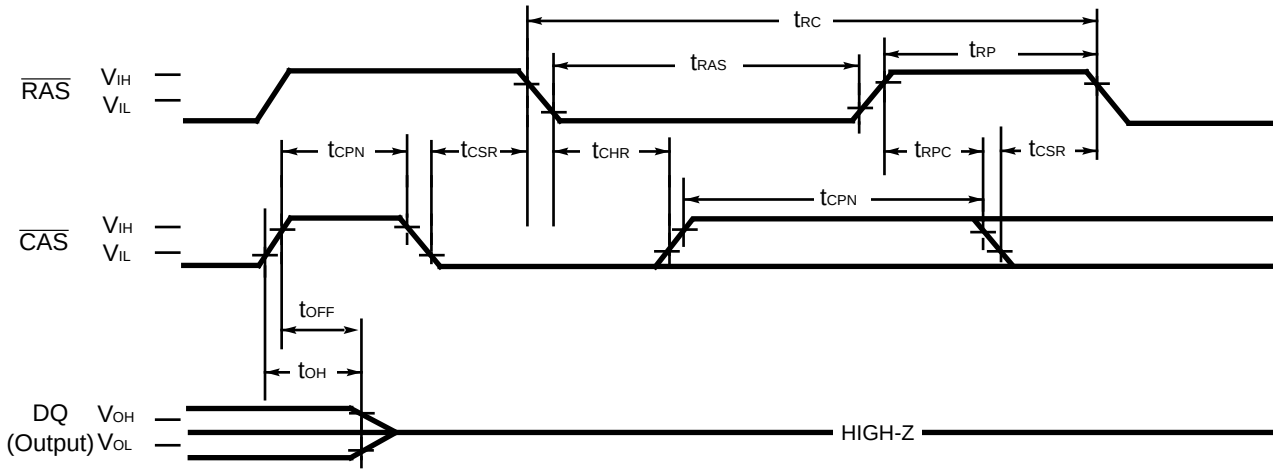

DESCRIPTION

$\overline{CAS}$-before-$\overline{RAS}$ refresh is an on-chip refresh capability that eliminates the need for external refresh addresses. If $\overline{CAS}$ is held Low for the specified setup time (t_{CSR}) before $\overline{RAS}$ goes Low, the on-chip refresh control clock generators and refresh address counter are enabled. An internal refresh operation automatically occurs and the refresh address counter is internally incremented in preparation for the next $\overline{CAS}$-before-$\overline{RAS}$ refresh operation.

Fig. 18 – HIDDEN REFRESH CYCLE

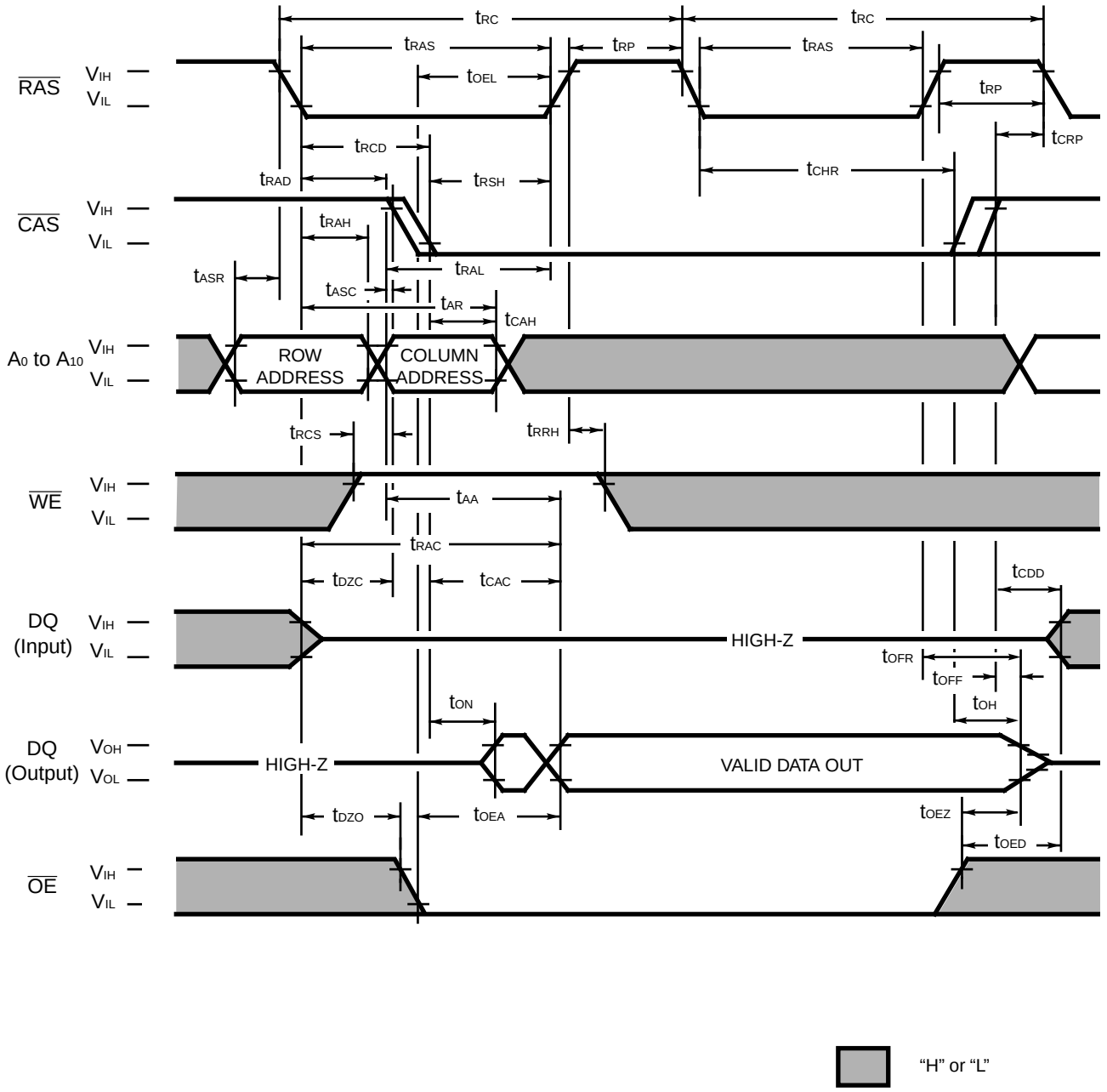

DESCRIPTION

A hidden refresh cycle may be performed while maintaining the latest valid data at the output by extending the active time of $\overline{CAS}$ and cycling $\overline{RAS}$. The refresh row address is provided by the on-chip refresh address counter. This eliminates the need for the external row address that is required by DRAMs that do not have $\overline{CAS}$-before-$\overline{RAS}$ refresh capability.

Fig. 19 – $\overline{CAS}$-BEFORE-$\overline{RAS}$ REFRESH COUNTER TEST CYCLE

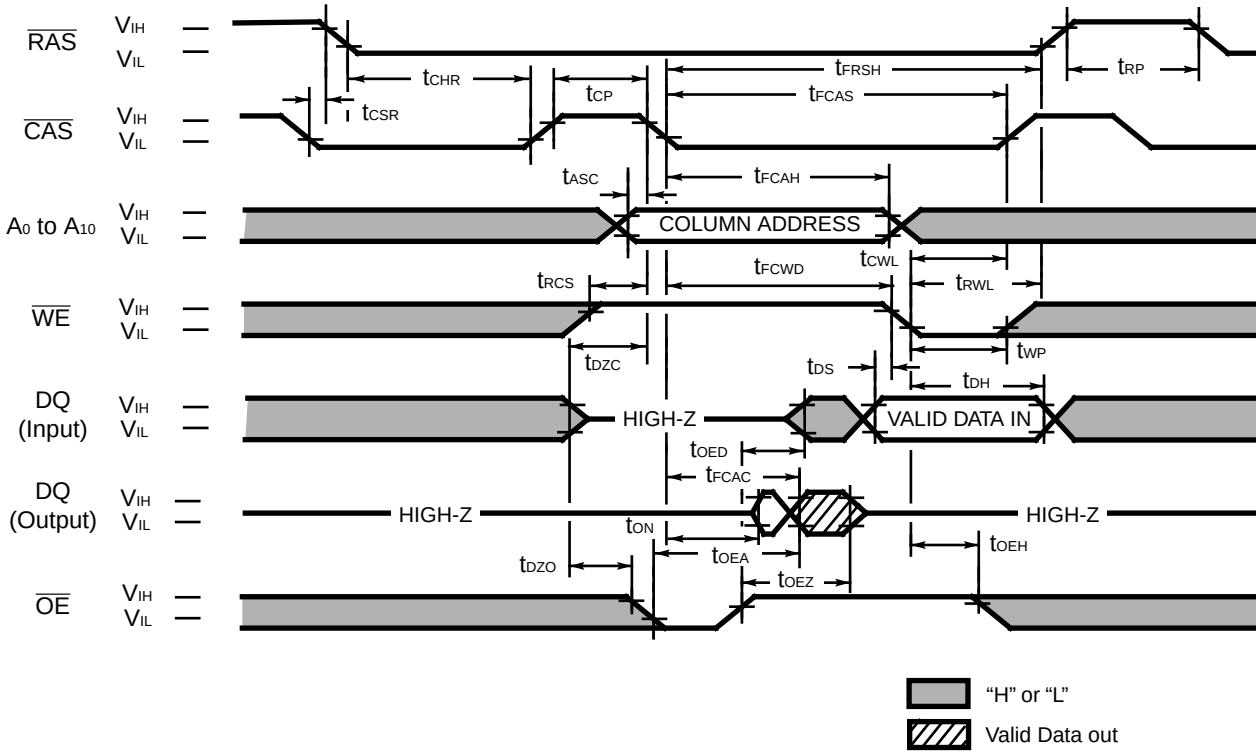

DESCRIPTION

A special timing sequence using the $\overline{CAS}$-before-$\overline{RAS}$ refresh counter test cycle provides a convenient method to verify the functionality of $\overline{CAS}$-before-$\overline{RAS}$ refresh circuitry. If, after a $\overline{CAS}$-before-$\overline{RAS}$ refresh cycle $\overline{CAS}$ makes a transition from High to Low while $\overline{RAS}$ is held Low, read and write operations are enabled as shown above. Row and column addresses are defined as follows:

Row Address: Bits A_0 through A_{10} are defined by the on-chip refresh counter.
Column Address: Bits A_0 through A_{10} are defined by latching levels on A_0-A_{10} at the second falling edge of $\overline{CAS}$.

The $\overline{CAS}$-before-$\overline{RAS}$ Counter Test procedure is as follows ;

1) Initialize the internal refresh address counter by using 8 $\overline{RAS}$ only refresh cycles.
2) Use the same column address throughout the test.
3) Write "0" to all 2048 row addresses at the same column address by using normal write cycles.
4) Read "0" written in procedure 3) and check; simultaneously write "1" to the same addresses by using $\overline{CAS}$-before-$\overline{RAS}$ refresh counter test (read-modify-write cycles). Repeat this procedure 2048 times with addresses generated by the internal refresh address counter.
5) Read and check data written in procedure 4) by using normal read cycle for all 2048 memory locations.
6) Reverse test data and repeat procedures 3), 4), and 5).

(At recommended operating conditions unless otherwise noted.)

No.	Parameter	Symbol	MB8117405A-60		MB8117405A-70		Unit
			Min.	Max.	Min.	Max.	
69	Access Time from $\overline{CAS}$	t_{FCAC}	—	50	—	55	ns
70	Column Address Hold Time	t_{FCAH}	35	—	35	—	ns
71	$\overline{CAS}$ to $\overline{WE}$ Delay Time	t_{FCWD}	70	—	77	—	ns
72	$\overline{CAS}$ Pulse width	t_{FCAS}	90	—	99	—	ns
73	$\overline{RAS}$ Hold Time	t_{FRSH}	90	—	99	—	ns

Note. Assumes that $\overline{CAS}$-before-$\overline{RAS}$ refresh counter test cycle only..

■ PACKAGE DIMENSIONS

(Suffix: -PJ)

26 pin, Plastic SOJ
(LCC-26P-M09)

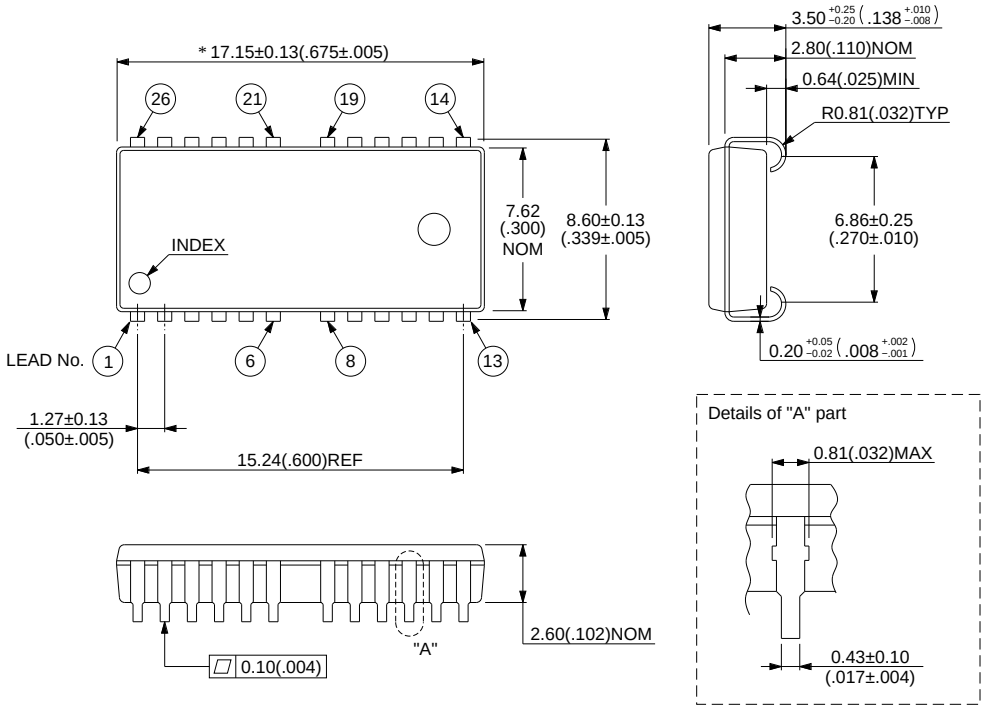

Dimensions in mm(inches).

■ PACKAGE DIMENSIONS (Continued)

(Suffix: -PFTN)

26 pin, Plastic TSOP(II)
(FPT-26P-M05)

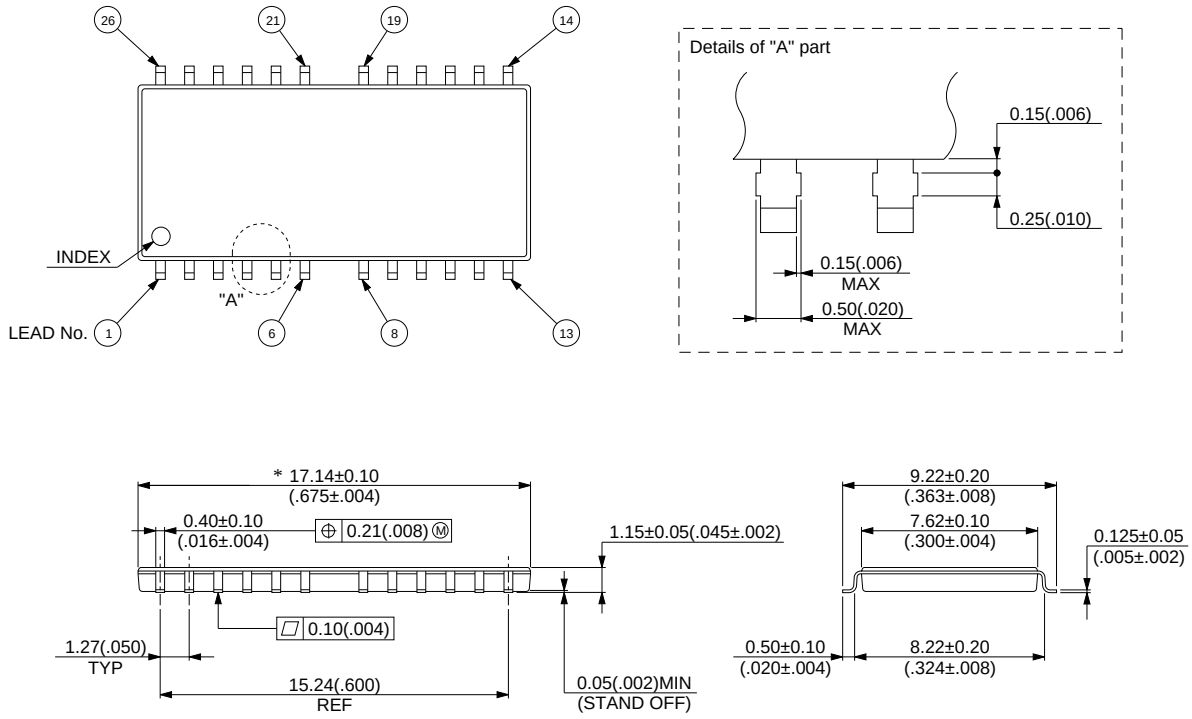

Dimensions in mm(inches).

FUJITSU LIMITED

For further information please contact:

Japan
FUJITSU LIMITED
Corporate Global Business Support Division
Electronic Devices
KAWASAKI PLANT, 4-1-1, Kamikodanaka
Nakahara-ku, Kawasaki-shi
Kanagawa 211-88, Japan
Tel: (044) 754-3763
Fax: (044) 754-3329

North and South America
FUJITSU MICROELECTRONICS, INC.
Semiconductor Division
3545 North First Street
San Jose, CA 95134-1804, U.S.A.
Tel: (408) 922-9000
Fax: (408) 432-9044/9045

Europe
FUJITSU MIKROELEKTRONIK GmbH
Am Siebenstein 6-10
63303 Dreieich-Buchschlag
Germany
Tel: (06103) 690-0
Fax: (06103) 690-122

Asia Pacific
FUJITSU MICROELECTRONICS ASIA PTE. LIMITED
#05-08, 151 Lorong Chuan
New Tech Park
Singapore 556741
Tel: (65) 281-0770
Fax: (65) 281-0220

F9703

The contents of this document are subject to change without notice. Customers are advised to consult with FUJITSU sales representatives before ordering.

The information and circuit diagrams in this document presented as examples of semiconductor device applications, and are not intended to be incorporated in devices for actual use. Also, FUJITSU is unable to assume responsibility for infringement of any patent rights or other rights of third parties arising from the use of this information or circuit diagrams.

FUJITSU semiconductor devices are intended for use in standard applications (computers, office automation and other office equipment, industrial, communications, and measurement equipment, personal or household devices, etc.).
CAUTION:
Customers considering the use of our products in special applications where failure or abnormal operation may directly affect human lives or cause physical injury or property damage, or where extremely high levels of reliability are demanded (such as aerospace systems, atomic energy controls, sea floor repeaters, vehicle operating controls, medical devices for life support, etc.) are requested to consult with FUJITSU sales representatives before such use. The company will not be responsible for damages arising from such use without prior approval.

Any semiconductor devices have inherently a certain rate of failure. You must protect against injury, damage or loss from such failures by incorporating safety design measures into your facility and equipment such as redundancy, fire protection, and prevention of over-current levels and other abnormal operating conditions.

If any products described in this document represent goods or technologies subject to certain restrictions on export under the Foreign Exchange and Foreign Trade Control Law of Japan, the prior authorization by Japanese government should be required for export of those products from Japan.